ISO9001 API-6D ATEX Industrie Service

RESTA®

We'd Love to Hear From You, Get In Touch With Us!

Oubei Town Wenzhou City Zhejiang Province China

+86 (577) 57754181

+86 (577) 57754689

+86 136 3422 5603

info@restavalve.com

Invites Distributors:

RESTA®

CAST & FORGED STEEL VALVES

www.restavalve.com

WENZHOU RESTA VALVE CO., LTD.

www.restavalve.com

WENZHOU
RESTA VALVE
CO., LTD.

About RESTA

Established in1998, RESTA is a professional valves manufacturer in China, and has two factories. One is located in Wenzhou, manufacturing ball valves, gate valves, globe valves and check valves and plug valves. The other is located in Lishui, specialized in manufacturing butterfly valves, pinch valves, diaphragm valves and customized valves. We also have two joint factories who manufacture globe control valves and safety valves. Our workshop covers area of 8200㎡, has 158 employees with production capacity of 20,000 tons per year. After years of development, RESTA has acquired API 607, CE as well as fugitive emissions certificate ISO 158481 and the quality management system certificate ISO9001:2000.

Valves made by RESTA are designed and manufactured according to API, ASTM, GOST and EN standards. Materials include ductile iron, carbon steel, stainless steel and alloy materials such as Monel, Inconel, Hastelloy, Duplex steel, Titanium. Our products are widely used in Oil, Gas, Refinery, Chemical, Marine, Potable Water, Waste Water, Sewage, Power Station, etc. Because of outstanding product quality and service, our valves have been exported to USA, Mexico, Argentina, Spain, Poland, Germany, Italy, Turkey, South Africa, Gana, Nigeria, Singapore, Malaysia, Thailand, Philippine, Russia, Kazakhstan [···]

"Customers' success" has always been top concern for RESTA. Going forward, we are still committed to creating value for our business partners and contributing their success.

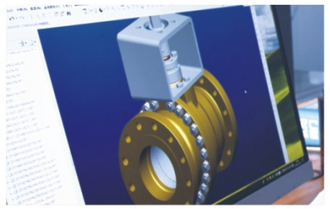

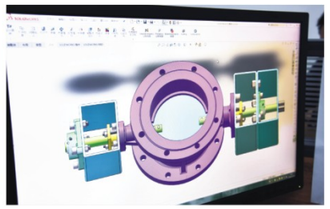

ISO9001 API-6D ATEX Industrie Service

Production Equipment

Advanced equipment is the guarantee for producing high-quality products!

Quality is the life of company in process of manufacturing. We use advanced machines，good production craft and precisely testing equipment to meet customers requirements. Keeping innovation and continuous improvement is the goal that we pursued.








Qaulity you can trust
RESTA®


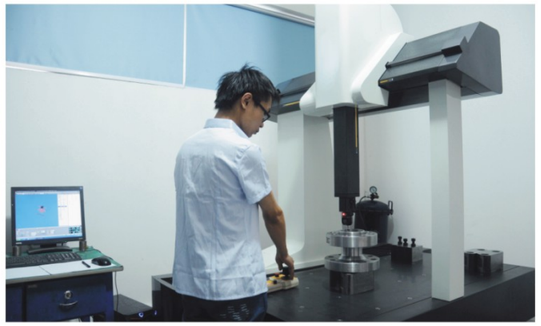

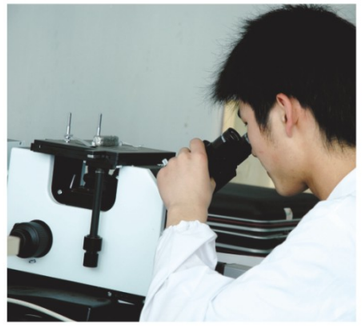



Testing Equipment

Meticulous monitoring is the assurance of product quality.
We never allow quality defect injuring our brand.
Orderly production process and effective working efficiency is quite crucial for making a success.

WENZHOU RESTA VALVE CO., LTD.

Contents

WENZHOU
RESTA VALVE
CO., LTD.

Design

RESTA cast steel floating ball valves are designed and manufactured to provide maximum service life and dependability. All ball valves are full or reduced bore and meet the design requirements of API 608 & API 6D, BS 5351 and generally conform to ASME B16.34. Valves are available in a complete range of body/bonnet materials and trim.

Range of Materials

The major materials of standard body/bonnet are carbon, cryogenic and stainless steel. For some special applications, we can provide others as per customer's requirements.

Available Modifications

Trim Changes
Ends Connection Modifications
Packing & Gasket Changes
Operator Type
Extended Stem
Pressure Equalizing
Anti Satics & Fire Safe
Customer's Specified Coatings
Changable Welded-end Bore
Oxygen & Chlorine Cleaning & Packaging

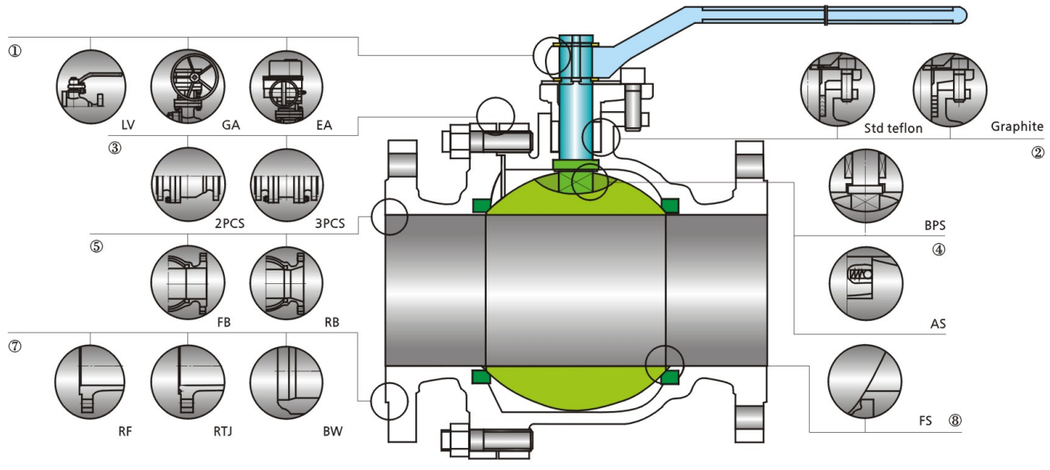

①Operation

Extended lever is easy for operation and available with gear, motor, pneumatic or hydraulic actuator for more difficult services.

②Packing

Standard packing, multiple V-TEFLON packing combined with live loading, maintains packing compression under highcycle and severe service conditions.Graphite packing agrees with high temperature.

③Body & Bonnet

2-piece:12" or below
3-piece:14" or above
Split body is easy for components repair.

④Blow-out Proof Stem(BPS)

The stem is designed with integral T-shoulder to provide blow-out proof effectively. It is internally inserted as the backseat function to assure stem sealing safety at all pressures.

⑤Bore

Full bore or reduced port can be selected acc. to request. Full bore design provides exceptional flow control.

⑥Anti Static Device(AS)

Anti static devices between ball & stem and stem & body are assembled by a spring & a stainless steel ball, which ensure all metal parts are grounded.

⑦Ends Connection

Flanged or butt-welded end is for pipe connection.

⑧Fire Safe(FS)

The fire safe design is in accordance with API607 & BS 6755. When non-mental resilient seats are destroyed in a fire, the upstream medium pressure push the ball into the downstream metal seat lip to cut off the line fluid and prevent the internal leakage due to a secondary metal-to-metal seal.

Cast Steel Floating Ball Valve www.restavalve.com RESTA®

Applicable Standards

Design & Manufacture: BS5351, API 6D
Pressure-temperature Rating: ASME B16.34
Fire Safe: API 607/API 6FA
Anti Static: API 608
Face to Face: ASME B16.10/API 6D
Flange End: ASME B16.5
Butt Welded End: ASME B16.25
Inspection & Test: API 598, API 6D,BS5146

Design Description

Floating Ball
Split Body
Full Bore or Reduce Bore
Bolted Bonnet
Blow-out Proof Stem
Fire Safe
Anti Static Device
Stopper Device
ISO 5211 Mounting Pad
Flanged or Butt Welded End

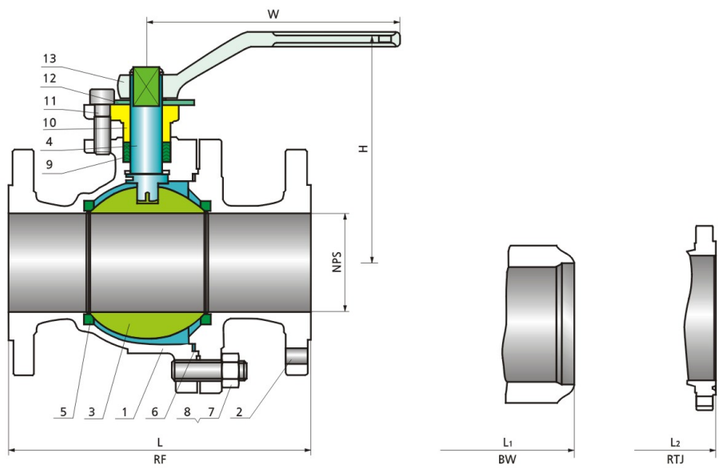

Main Parts Materials

NO	Part Name	ASTM Material		
		Carbon Steel	Stainless Steel	Cryogenic Steel
1	Body	A216-WCB	A351-CF8M	A352-LCB
2	Bonnet	A216-WCB	A351-CF8M	A352-LCB
3	Ball	A182-F304[1)]	A182-F316	A182-F304[1)]
4	Stem	A182-F6A	A182-F316	A182-F304
5	Seat Ring		RPTFE	
6	Bonnet Gasket	Graphite+304[2)]	Graphite+316 [2)]	Graphite+304[2)]
7	Bonnet Stud	A193-B7	A193-B8	A320-L7
8	Bonnet Stud Nut	A194-2H	A194-8	A194-4
9	Packing		PTFE	
10	Gland Flange	A216-WCB	A351-CF8	A352-LCB
11	Gland Bolt	A193-B7	A193-B8	A320-L7
12	Stopper	Carbon Steel	Carbon Steel+Zn	Carbon Steel
13	Handle		Carbon Steel	

Note: 1)A105+ENP optional ;
2)Sprial wound construction;
3)The mentioned materials are just in general, and we will provide other material acc. to client's request.

Dimensions Data — PN16/PN20/Class 150

Size	in	1/2	3/4	1	1 1/2	2	2 1/2	3	4	6	8	10
	mm	15	20	25	40	50	65	80	100	150	200	250
L(RF)	mm	108	117	127	165	178	191	203	229	394	457	533
L_1(BW)	mm	140	152	165	190	216	241	283	305	457	521	559
H	mm	85	90	99	126	140	165	178	230	310	350	400
W	mm	140	140	150	200	250	300	350	500	800	1000	1000
Weight	Kg	3	4	5	8	12	18	24	38	82	145	235

Dimensions Data — PN25/PN40/Class300

Size	in	1/2	3/4	1	1 1/2	2	2 1/2	3	4	6	8
	mm	15	20	25	40	50	65	80	100	150	200
L(RF)	mm	140	152	165	190	216	241	283	305	457	502
L_1(BW)	mm	140	152	165	190	216	241	283	305	457	521
H	mm	85	90	99	126	140	165	178	230	310	350
W	mm	140	140	150	200	250	300	350	500	800	1000
Weight	Kg	3	5	6	11	16	24	34	56	125	222

Dimensions Data — PN100/PN110/Class 600

Size	in	1/2	3/4	1	1 1/2	2	2 1/2	3	4
	mm	15	20	25	40	50	65	80	100
L(RF)	mm	165	191	216	241	292	330	356	432
L_1(BW)	mm	165	191	216	241	292	330	356	432
L_2(RTJ)	mm	163.5	191	216	241	295	333	359	435
H	mm	79	83	114	125	156	172	220	250
W	mm	140	140	200	250	300	350	500	650
Weight	Kg	5	7	9	17	25	42	56	85

Note: Reduced bore can be selected as client's requirement.

Design

RESTA cast steel trunnion ball valves are designed and manufactured to provide maximum service life and dependability. All ball valves are full or reduced bore and meet the design requirements of API 608 & API 6D, BS 5351 and generally conform to ASME B16.34. Valves are available in a complete range of body/bonnet materials and trim.

Range of Materials

The major materials of standard body/bonnet are carbon, cryogenic and stainless steel. For some special applications, we can provide others as per customer's requirements.

Availble Modifications

Trim Changes
Ends Connection Modifications
Packing & Gasket Changes
Operator Type
Extended Stem
Pressure Equalizing
Anti Static & Fire Safe
Customer's Specified Coatings
Changable Welded-end Bore
Oxygen & Chlorine Cleaning & Packaging

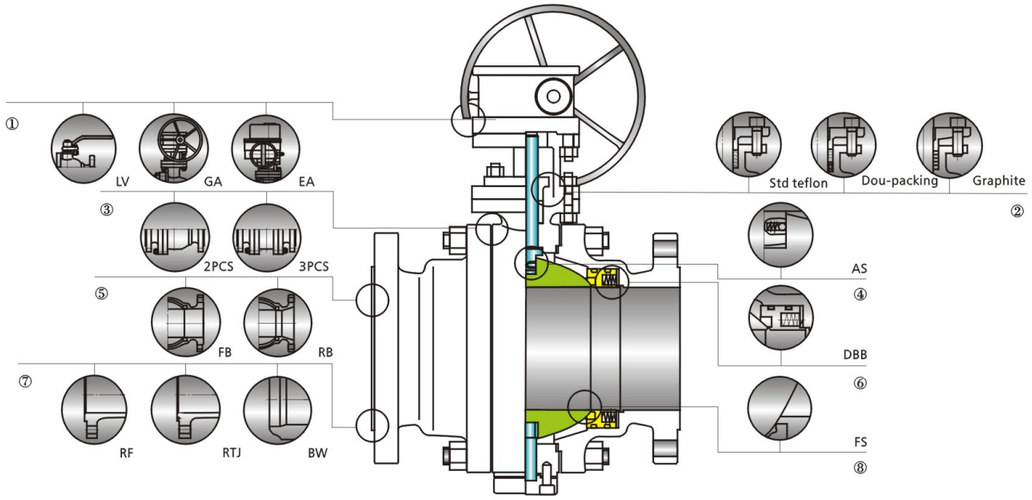

①Operation

Extended lever is easy for operation and available with gear, motor, pneumatic or hydraulic actuator for more difficult services.

②Packing

Standard packing, multiple V-TEFLON packing combined with live loading, maintains packing compression under highcycle and severe service conditions.Graphite packing agrees with high temperature.

③Body & Bonnet

2-piece:12" or below
3-piece:14" or above
Split body is easy for components repair.

④Anti Static Device(AS)

Anti static devices between ball & stem and stem & body are assembled by a spring & a stainless steel ball, which ensure all metal parts are grounded.

⑤Bore

Full bore or reduced port can be selected acc. to request. Full bore design provides exceptional flow control.

⑥Double Block and Bleed(DBB)

When the ball is in the closed position, each seat of the ball valve can cut off the medium independently on the upstream and downstream side to realise double-block function.The body cavity is isolated from each side of the valve, and the pressure could be released through the vent valve.

⑦Ends Connection

Flanged or butt-welded end is for pipe connection.

⑧Fire Safe(FS)

The fire safe design is in accordance with API607 & BS 6755. When non-mental resilient seats are destroyed in a fire, the upstream medium pressure push the ball into the downstream metal seat lip to cut off the line fluid and prevent the internal leakage due to a secondary metal-to-metal seal.

Applicable Standards

Design & Manufacture: API 6D
Pressure-temperature Rating: ASME B16.34
Fire Safe: API 607/API 6FA
Anti Static: API 608
Face to Face: ASME B16.10/API 6D
Flange End: ASME B16.5
Butt Welded End: ASME B16.25
Inspection & Test: API 598/API 6D

Design Description

Trunnion Ball
3-piece body for 12" & above
Full Bore or Reduce Bore
Bolted Bonnet
Blow-out Proof Stem
Fire Safe
Anti Static Device
Stopper Device
ISO 5211 Mounting Pad
Flanged or Butt Welded End

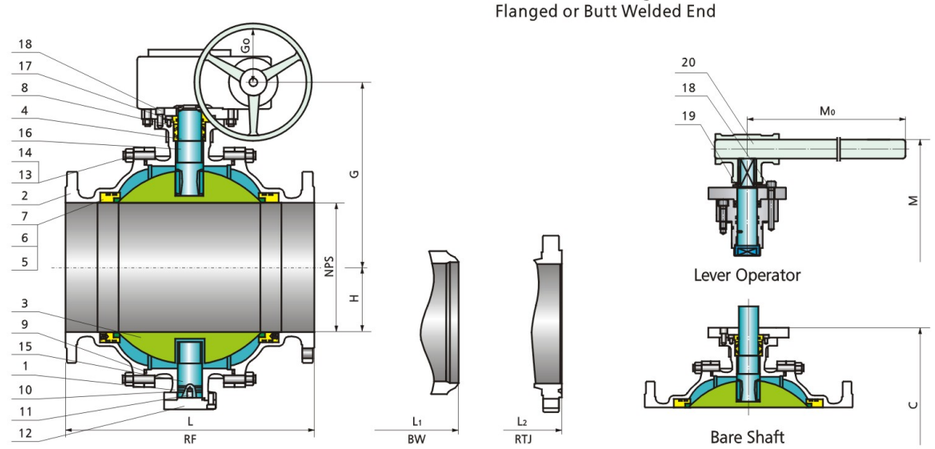

Main Parts Materials

NO	Part Name	ASTM Material		
		Carbon Steel	Stainless Steel	Cryogenic Steel
1	Body	A216-WCB	A351-CF8M	A352-LCB
2	Bonnet	A216-WCB	A351-CF8M	A352-LCB
3	Ball	A182-F304[1]	A182-F316	A182-F304[1]
4	Upper Stem	A182-F6A	A182-F316	A182-F304
5	Seat	A105+ENP	A182-F316	A350-LF2+ENP
6	Seat Spring	A313-304	Inconel X-750	A313-304
7	Seat O-ring	NBR	Viton	Viton
8	Stem O-ring	NBR	Viton	Viton
9	Bonnet Gasket	Graphite+304[2]	Graphite+316[2]	Graphite+304[2]
10	Bonnet O-ring	NBR	Viton	Viton
11	Antistatic Spring	SS304	SS316	SS304
12	Grounding Plunger	A105	A182-F316	A182-F304
13	Bonnet Stud	A193-B7	A193-B8	A320-L7
14	Bonnet Stud Nut	A194-2H	A194-8	A194-4
15	Lower Stem	A182-F6A	A276-316	A276-304
16	Stem Bearing	304+PTFE	316+PTFE	304+PTFE
17	Gland Flange	A216-WCB	A351-CF8M	A352-LCB
18	Stopper	A193-B7	A193-B8	A193-B7
19	Stop Plate	Carbon Steel	Carbon Steel+Zn	Carbon Steel
20	Handle	Carbon Steel		

Note: 1)A105+ENP optional ;
2)Sprial wound construction;
3)The mentioned materials are just in general, and we will provide other material acc. to client's request.

Dimensions Data — PN16/PN20/Class 150

Size		in	2	2 1/2	3	4	6	8	10	12	14	16	18	20	22	24	26	28	30	32	34	36	40
		mm	50	65	80	100	150	200	250	300	350	400	450	500	550	600	650	700	750	800	850	900	1000
L(RF)		mm	178	191	203	229	394	457	533	610	686	762	864	914	991	1067	1143	1245	1295	1372	1473	1524	1753
L1(BW)		mm	216	241	283	305	457	521	559	635	762	838	914	991	1092	1143	1245	1346	1397	1524	1626	1727	1956
L.O	M	mm	168	175	186	225	330	370	-	-	-	-	-	-	-	-	-	-	-	-	-	-	-
	Mo	mm	250	300	350	450	800	1000	-	-	-	-	-	-	-	-	-	-	-	-	-	-	-
G.O	G	mm	-	-	-	235	280	398	495	530	580	602	640	700	740	823	895	906	968	1048	1098	1118	1285
	Go	mm	-	-	-	280	300	400	400	500	500	600	600	600	600	700	700	700	700	700	700	700	700
C		mm	115	135	165	220	260	300	350	370	400	450	510	550	580	650	700	720	770	800	830	885	950
H		mm	85	98	117	141	193	240	293	340	372	412	462	511	556	601	700	780	800	840	860	880	930
Torque		N • M	57	71	95	192	485	832	1105	1655	2695	3164	3793	5500	6650	7529	8693	10770	12365	14070	21148	22987	26059
Weight		Kg	10	14	22	35	75	111	217	385	457	739	930	1657	2568	2887	3376	4183	4705	5735	6573	7537	9848

Dimensions Data — PN25/PN40/PN50/Class300

Size		in	2	2 1/2	3	4	6	8	10	12	14	16	18	20	22	24	26	28	30	32	34	36	40
		mm	50	65	80	100	150	200	250	300	350	400	450	500	550	600	650	700	750	800	850	900	1000
L(RF)		mm	216	241	283	305	457	502	568	648	762	838	914	991	1092	1143	1245	1346	1397	1524	1626	1727	1956
L1(BW)		mm	216	241	283	305	457	521	556	648	762	838	914	991	1092	1143	1245	1346	1397	1524	1626	1727	1956
L.O	M	mm	168	175	186	225	330	370	-	-	-	-	-	-	-	-	-	-	-	-	-	-	-
	Mo	mm	250	300	350	450	800	1000	-	-	-	-	-	-	-	-	-	-	-	-	-	-	-
G.O	G	mm	-	-	-	235	285	398	495	530	580	602	640	712	799	826	895	906	968	1048	1098	1118	1285
	Go	mm	-	-	-	280	300	400	400	500	500	600	600	600	600	700	700	700	700	700	700	700	700
C		mm	115	135	165	220	260	300	350	370	400	450	510	562	620	656	700	720	770	800	830	885	950
H		mm	85	98	117	141	193	240	293	340	372	412	462	511	556	601	700	780	800	840	860	880	930
Torque		N • M	99	124	212	335	544	1250	1736	2388	3224	5139	7970	10570	12140	17240	20340	25069	27640	29550	31558	35170	39115
Weight		Kg	15	24	30	55	90	201	350	510	720	1330	1602	1988	2557	3258	3720	4261	5423	6558	7323	8254	10577

Dimensions Data — PN100/PN110/ Class600

Size		in	2	2 1/2	3	4	6	8	10	12	14	16	18	20	22	24	26	28	30	32	34	36	40
		mm	50	65	80	100	150	200	250	300	350	400	450	500	550	600	650	700	750	800	850	900	1000
L/ L1(RF/BW)		mm	292	330	356	432	559	660	787	838	889	991	1092	1194	1295	1397	1448	1549	1651	1778	1930	2083	2337
L2(RTJ)		mm	295	333	359	435	562	664	791	841	892	994	1095	1200	1305	1407	1461	1562	1664	1794	1946	2099	2366
L.O	M	mm	195	220	247	275	-	-	-	-	-	-	-	-	-	-	-	-	-	-	-	-	-
	Mo	mm	500	600	700	800	-	-	-	-	-	-	-	-	-	-	-	-	-	-	-	-	-
G.O	G	mm	-	-	220	254	360	390	450	500	520	550	635	675	728	780	810	840	870	915	951	987	1212
	Go	mm	-	-	300	400	400	400	500	500	500	500	600	600	600	600	700	700	800	800	800	1000	1000
C		mm	105	135	165	210	253	290	333	380	395	433	470	505	545	595	635	665	710	755	780	815	915
H		mm	100	115	130	162	203	257	310	350	360	413	430	490	510	570	620	690	750	780	815	840	940
Torque		N • M	168	210	360	572	912	2177	3093	4282	7458	9310	14693	20011	24785	31226	35184	38987	41832	63865	71720	89020	109900
Weight		Kg	33	47	58	83	180	340	530	960	1250	1549	1830	2320	3899	4665	5751	6405	7056	8253	8978	10182	14584

Note: 1)The maximum size of ball valve we can provide: 150LB-60", 300LB-56",600LB-56".
2)Reduce bore can be selected as client's requirement.

Dimensions Data — PN150/PN160/Class900

Size		in	2	2 1/2	3	4	6	8	10	12	14	16	18	20	22	24	26	28	30	32	34	36
		mm	50	65	80	100	150	200	250	300	350	400	450	500	550	600	650	700	750	800	850	900
L/ L1(RF/BW)		mm	368	419	381	457	610	737	838	965	1029	1130	1219	1321	-	1549	1651	1753	1880	2032	2159	2286
L2(RTJ)		mm	371	422	384	460	613	740	841	968	1038	1140	1232	1334	-	1568	1673	1775	1902	2054	2188	2315
L.O	M	mm	217	241	259	-	-	-	-	-	-	-	-	-	-	-	-	-	-	-	-	
	Mo	mm	650	650	800	-	-	-	-	-	-	-	-	-	-	-	-	-	-	-	-	
G.O	G	mm	-	-	255	285	370	410	480	525	545	580	625	666	-	835	875	930	1005	1275	1315	1340
	Go	mm	-		400	400	400	500	500	500	500	600	600	600	-	700	700	800	1000	1000	1000	1000
C		mm	105	135	165	210	260	305	368	405	425	470	505	560	-	640	668	700	750	800	835	880
H		mm	110	118	130	167	251	280	340	390	442	490	500	500	-	630	650	710	780	810	850	900
Torque		N • M	39	55	68	98	220	500	942	1200	1655	1998	2415	3135	-	5496	6565	7735	8946	10568	14550	15572
Weight		Kg	228	263	512	946	1784	4116	5910	10137	14141	18866	22400	28544	-	43276	48580	60000	76000	90195	100460	131875

Dimensions Data — PN250/PN260/Class1500

Size		in	2	2 1/2	3	4	6	8	10	12	14	16	18	20	22	24
		mm	50	65	80	100	150	200	250	300	350	400	450	500	550	600
L/ L1(RF/BW)		mm	368	419	470	546	705	832	991	1130	1257	1384	1537	1664	-	-
L2(RTJ)		mm	371	422	473	549	711	841	1000	1146	1276	1407	1559	1686	-	1972
L.O	M	mm	237	261	269	297	-	-	-	-	-	-	-	-	-	-
	Mo	mm	800	800	1000	1000	-	-	-	-	-	-	-	-	-	-
G.O	G	mm	-	-	255	285	460	520	640	720	760	820	880	900	-	920
	Go	mm	-	-	500	500	500	500	500	500	500	600	600	700	-	800
C		mm	105	138	165	215	260	300	365	420	440	480	550	620	-	700
H		mm	105	120	130	167	270	300	360	423	460	510	600	650	-	720
Torque		N • M	390	448	931	1524	2934	7215	10990	16103	24518	39630	34392	40918	-	65351
Weight		Kg	40	63	95	180	400	750	1165	1725	2080	3718	5065	7612	-	11387

Note: Reduce bore can be selected as client's requirement.

Design

RESTA forged steel floating ball valves are designed and manufactured to provide maximum service life and dependability. All ball valves are full or reduced bore and meet the design requirements of API 608 & API 6D, BS 5351 and generally conform to ASME B16.34. Valves are

Range of Materials

available in a complete range of body/bonnet materials and trim. The major materials of standard body/bonnet are carbon, cryogenic and stainless steel. For some special applications, we can provide others as per customer's requirements.

Availble Modifications

Trim Changes
End Connection Modifications
Packing & Gasket Changes
Operator Type
Extended Stem
Pressure Equalizing
Anti Static & Fire Safe
Customer's Specified Coatings
Changable Welded-end Bore
Oxygen & Chlorine Cleaning & Packaging

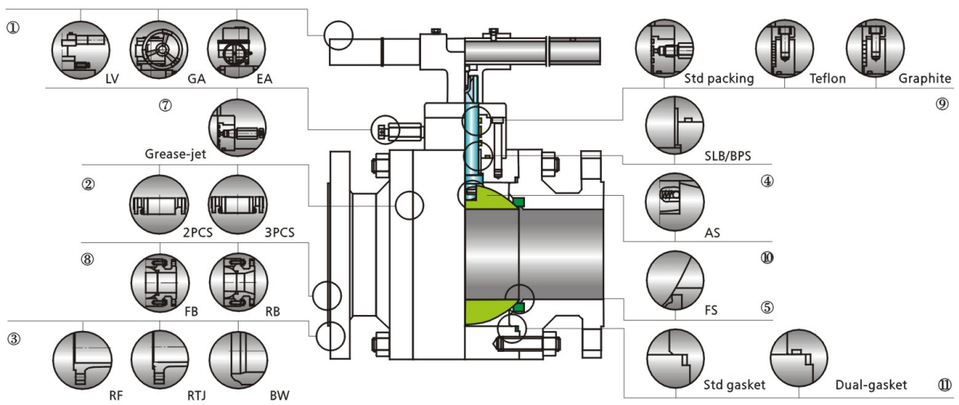

①Operation

Extended lever is easy for operation and available with gear, motor, pneumatic or hydraulic actuator for more difficult services.

②Body & Bonnet

2-piece:12" or below 3-piece:14" or above
Split body is easy for components repair.

③Ends Connection

Flanged or butt-welded end is for pipe connection.

④Self Lubrication Bearing(SLB)

Easy operation, low torque and long life

⑤Fire Safe(FS)

The fire safe design is in accordance with API607 & BS 6755. When non-mental resilient seats are destroyed in a fire, the upstream medium pressure push the ball into the downstream metal seat lip to cut off the line fluid and prevent the internal leakage due to a secondary metal-to-metal seal.

⑥Blow-out Proof Stem(BPS)

The stem is designed with integral T-shoulder to provide blow-out proof effectively. It is internally inserted as the backseat function to assure stem sealing safety at all pressures.

⑦Grease Injection

It is installed in prescriptive part according to the application and fulfill general situations and realize seal in spot with maintenance.

⑧Bore

Full bore or reduced port can be selected acc. to request. Full bore design provides exceptional flow control.

⑨Packing

Standard packing adopts high-performance rubber seal ring. Standard packing & TEFLON packing relieve and apply to high pressure situation along with the spring. Graphite packing agrees with high temperature.

⑩Anti Static Device(AS)

Anti static devices between ball & stem and stem & body are assembled by a spring & a stainless steel ball, which ensure all metal parts are grounded.

⑪Gasket

Standard gasket or double-gasket. Standard gasket adopts high-performance rubber seal ring. Double-gasket adopts high-performance rubber seal ring and spiral wound graphite.

Applicable Standards

Design & Manufacture: API 6D
Pressure-temperature Rating: ASME B16.34
Fire Safe: API 607/API F6A
Anti Static: API 608
Face to Face: ASME B16.10/API 6D
Flange Ends: ASME B16.5
Butt-welded Ends: ASME B16.25
Inspection & Test: API 598/API 6D

Design Description

Floating Ball
Split Body
Full Bore or Reduce Bore
Bolted Bonnet
Blow-out Proof Stem
Fire Safe
Anti Static Device
Stopper Device
ISO 5211 Mounting Pad
Flanged or Butt Welded End

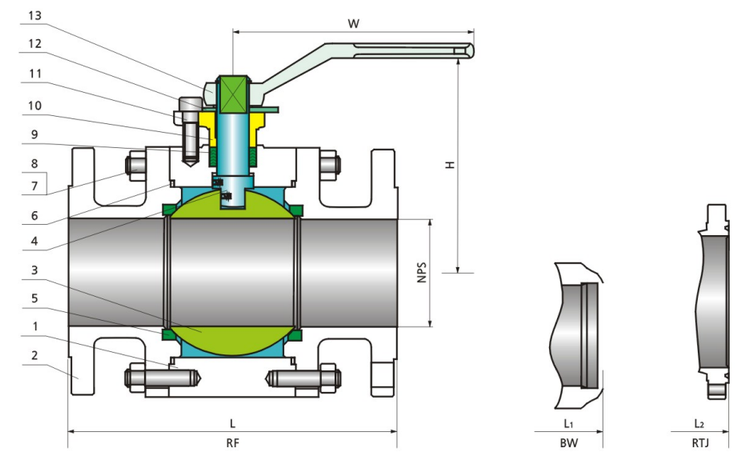

Main Parts Materials

NO	Part Name	ASTM Material		
		Carbon Steel	Stainless Steel	Cryogenic Steel
1	Body	A105N	A182-F316	A350-LF2
2	Bonnet	A105N	A182-F316	A350-LF2
3	Ball	A182-F304[1)]	A182-F316	A182-F304[1)]
4	Stem	A182-F6A	A182-F316	A182-F304
5	Seat Ring	RPTFE		
6	Bonnet Gasket	Graphite+304[2)]	Graphite+316[2)]	Graphite+304[2)]
7	Bonnet Stud	A193-B7	A193-B8	A320-L7
8	Bonnet Stud Nut	A194-2H	A194-8	A194-4
9	Packing	PTFE		
10	Gland	A105	A182-F316	A350-LF2
11	Gland Bolt	A193-B7	A193-B8	A193-B7
12	Stopper	Carbon Steel	Carbon Steel+Zn	Carbon Steel
13	Handle	Carbon Steel		

Note: 1)A105+ENP optional;
2)Sprial wound construction;
3)The mentioned materials are just in general, and we will provide other material acc. to client's request.

Dimensions Data PN16/PN20/Class150

Size	in	1/2	3/4	1	1 1/2	2	2 1/2	3	4	6	8	10
	mm	15	20	25	40	50	65	80	100	150	200	250
L(RF)	mm	108	117	127	165	178	191	203	229	394	457	533
L_1(BW)	mm	140	152	165	190	216	241	283	305	457	521	559
H	mm	82	87	92	108	119	150	175	220	280	320	380
W	mm	140	140	150	200	250	300	350	500	800	1000	1000
Weight	Kg	3	4	6	12	15	19	22	46	110	175	-

Dimensions Data PN25/PN40/Class300

Size	in	1/2	3/4	1	1 1/2	2	2 1/2	3	4	6	8
	mm	15	20	25	40	50	65	80	100	150	200
L(RF)	mm	140	152	165	190	216	241	283	305	457	502
L_1(BW)	mm	140	152	165	190	216	241	283	305	457	521
H	mm	82	87	92	108	119	150	175	220	280	320
W	mm	140	140	150	200	250	300	350	500	800	1000
Weight	Kg	4	6	10	18	22	28	38	78	148	196

Dimensions Data PN100/PN110/Class600

Size	in	1/2	3/4	1	1 1/2	2	2 1/2	3	4
	mm	15	20	25	40	50	65	80	100
L/ L_1(RF/BW)	mm	165	191	216	241	292	330	356	432
L_2(RTJ)	mm	163.5	191	216	241	295	333	359	435
H	mm	82	87	98	118	130	158	180	220
W	mm	140	140	200	250	300	350	500	650
Weight	Kg	5	7	10	15	22	28	38	78

Dimensions Data PN150/PN160/Class900 PN250/PN260/Class1500

Size	in	1/2	3/4	1	1 1/2	2	2 1/2
	mm	15	20	25	40	50	65
L/ L_1(RF/BW)	mm	216	229	254	305	368	419
L_2(RTJ)	mm	216	229	254	305	371	422
H	mm	85	90	98	118	130	160
W	mm	140	140	200	250	300	350
Weight	Kg	10	14	17	23	34	40

Dimensions Data PN420/Class2500

Size	in	1/2	3/4	1
	mm	15	20	25
L/ L_1(RF/BW)	mm	264	273	308
L_2(RTJ)	mm	264	273	308
H	mm	81	84	107
W	mm	200	200	300
Weight	Kg	12	16	20

Note: Reduce bore can be selected as client's requirement.

Design

RESTA forged steel trunnion ball valves are designed and manufactured to provide maximum service life and dependability. All ball valves are full or reduced bore and meet the design requirements of API 608 & API 6D, BS 5351 and generally conform to ASME B16.34. Valves are

Range of Materials

available in a complete range of body/bonnet materials and trim. The major materials of standard body/bonnet are carbon, cryogenic and stainless steel. For some special applications, we can provide others as per customer's requirements.

Availble Modifications

Trim Changes
End Connection Modifications
Packing & Gasket Changes
Operator Type
Extended Stem
Pressure Equalizing
Anti Static & Fire Safe
Customer's Specified Coatings
Changable Welded-end Bore
Oxygen & Chlorine Cleaning & Packaging

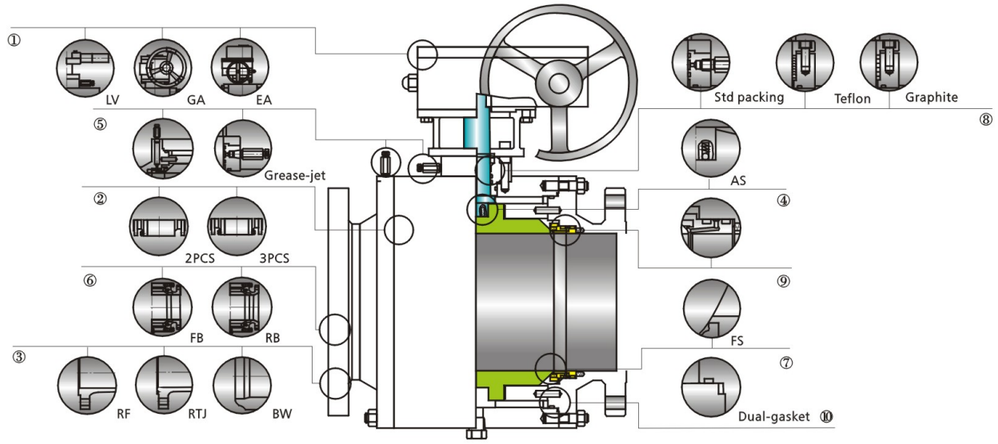

①Operation

Extended lever is easy for operation and available with gear, motor, pneumatic or hydraulic actuator for more difficult services.

②Body & Bonnet

2-piece:12" or below 3-piece:14" or above
Split body is easy for components repair.

③Ends Connection

Flanged or butt-welded end is for pipe connection.

④Anti Static Device(AS)

Anti static devices between ball & stem and stem & body are assembled by a spring & a stainless steel ball, which ensure all metal parts are grounded.

⑤Grease Injection

It is installed in prescriptive part according to the application and fulfill general situations and realize seal in spot with maintenance.

⑥Bore

Full bore or reduced port can be selected acc. to request. Full bore design provides exceptional flow control.

⑦Fire Safe(FS)

The fire safe design is in accordance with API607 & BS 6755. When non-mental resilient seats are destroyed in a fire, the upstream medium pressure push the ball into the downstream metal seat lip to cut off the line fluid and prevent the internal leakage due to a secondary metal-to-metal seal.

⑧Packing

Standard packing adopts high-performance rubber seal ring. Standard packing & TEFLON packing relieve and apply to high pressure situation along with the spring. Graphite packing agrees with high temperature.

⑨Double Block and Bleed(DBB)

When the ball is in the closed position, each seat of the ball valve can cut off the medium independently on the upstream and downstream side to realise double-block function. The body cavity is isolated from each side of the valve, and the pressure could be released through the vent valve.

⑩Gasket

Double-gasket adopts high-performance rubber seal ring and spiral wound graphite.

Forged Steel Trunnion Ball Valve www.restavalve.com RESTA®

Applicable Standards

Design & Manufacture: API 6D
Pressure-temperature Rating: ASME B16.34
Fire Safe: API 607/API F6A
Anti Static: API 608
Face to Face: ASME B16.10/API 6D
Flange End: ASME B16.5
Butt Welded End: ASME B16.25
Inspection & Test: API 598/API 6D

Design Description

Trunnion Ball
3-piece body for 12" & above
Full Bore or Reduce Bore
Bolted Bonnet
Blow-out Proof Stem
Fire Safe
Anti Static Device
Stopper Device
ISO 5211 Mounting Pad
Flanged or Butt Welded End

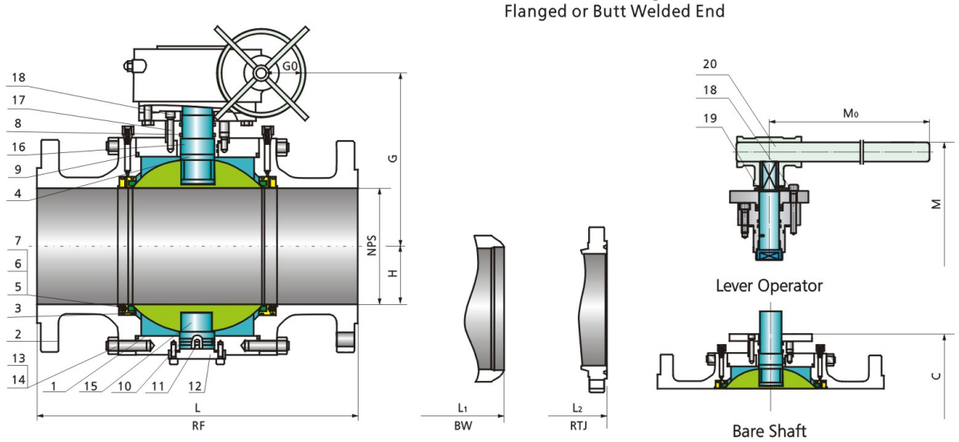

Main Parts Materials

NO	Part Name	ASTM Material		
		Carbon Steel	Stainless Steel	Cryogenic Steel
1	Body	A105N	A182-F316	A350-LF2
2	Bonnet	A105N	A182-F316	A350-LF2
3	Ball	A182-F304[1)]	A182-F316	A182-F304[1)]
4	Upper Stem	A182 F6A	A182 F316	A182 F304
5	Seat	A105+ENP	A182-F316	A350-LF2+ENP
6	Seat Spring	A313-304	Inconel X-750	A313-304
7	Seat O-ring	NBR	Viton	Viton
8	Stem O-ring	NBR	Viton	Viton
9	Bonnet Gasket	Graphite+304[2)]	Graphite+316[2)]	Graphite+304[2)]
10	Bonnet O-ring	NBR	Viton	Viton
11	Antistatic Spring	A182-F6A	A182-F316	A182-F304
12	Grounding Plunger	A182-F304	A182-F316	A182-F304
13	Bonnet Stud	A193-B7	A193-B8	A320-L7
14	Bonnet Stud Nut	A194-2H	A194-8	A194-4
15	Lower Stem	A276-304	A276-316	A276-304
16	Stem Bearing	304+PTFE	316+PTFE	304+PTFE
17	Gland Flange	A105	A182-F316	A350-LF2
18	Gland Bolt	A193-B7	A193-B8	A193-B7
19	Stopper	Carbon Steel	Carbon Steel+Zn	Carbon Steel
20	Handle	Carbon Steel		

Note: 1)A105+ENP optional ;
2)Sprial wound construction;
3)The mentioned materials are just in general, and we will provide other material acc. to client's request.

Dimensions Data — PN16/PN20/Class150

Size		in	2	2 1/2	3	4	6	8	10	12	14	16	18	20	22	24	26	28	30	32	34	36	40
		mm	50	65	80	100	150	200	250	300	350	400	450	500	550	600	650	700	750	800	850	900	1000
L(RF)		mm	178	191	203	229	394	457	533	610	686	762	864	914	991	1067	1143	1245	1295	1372	1473	1524	1753
L1(BW)		mm	216	241	283	305	457	521	559	635	762	838	914	991	1092	1143	1245	1346	1397	1524	1626	1727	1956
L.O	M	mm	130	142	191	200	226	242	-	-	-	-	-	-	-	-	-	-	-	-	-	-	-
	Mo	mm	250	300	350	500	800	1000	-	-	-	-	-	-	-	-	-	-	-	-	-	-	-
G.O	G	mm	-	-	185	235	325	390	445	520	550	580	605	610	670	725	760	790	825	870	910	950	1005
	Go	mm	-	-	280	280	300	400	400	500	500	600	600	600	600	700	700	700	700	700	700	700	700
C		mm	105	130	155	200	250	278	323	340	375	410	440	495	525	585	630	645	690	740	760	810	895
H		mm	100	110	125	160	185	222	280	303	330	355	390	430	475	520	560	650	700	745	775	805	900
Torque		N・M	57	71	95	192	485	832	1105	1655	2695	3164	3793	5500	6650	7529	8693	10770	12365	14070	21148	22987	26059
Weight		Kg	28	39	49	88	160	248	379	571	759	1150	1192	1769	2367	3450	4050	4830	5960	7480	8032	9100	14100

Dimensions Data — PN25/PN40/PN50/Class300

Size		in	2	2 1/2	3	4	6	8	10	12	14	16	18	20	22	24	26	28	30	32	34	36	40
		mm	50	65	80	100	150	200	250	300	350	400	450	500	550	600	650	700	750	800	850	900	1000
L(RF)		mm	216	241	283	305	457	502	568	648	762	838	914	991	1092	1143	1245	1346	1397	1524	1626	1727	1956
L1(BW)		mm	216	241	283	305	457	521	559	635	762	838	914	991	1092	1143	1245	1346	1397	1524	1626	1727	1956
L.O	M	mm	130	142	191	200	226	242	-	-	-	-	-	-	-	-	-	-	-	-	-	-	-
	Mo	mm	250	350	400	500	800	1000	-	-	-	-	-	-	-	-	-	-	-	-	-	-	-
G.O	G	mm	-	-	185	235	325	390	445	520	550	580	605	610	670	725	760	790	825	870	910	950	1005
	Go	mm	-	-	280	280	300	400	400	500	500	600	600	600	600	700	700	700	700	700	700	700	700
C		mm	105	130	155	200	250	278	333	360	395	433	460	505	530	590	635	645	700	750	760	810	905
H		mm	100	110	125	160	203	232	298	333	350	398	410	470	485	550	585	670	730	770	800	825	920
Torque		N・M	99	124	212	335	544	1250	1736	2388	3224	5139	7970	10570	12140	17240	20340	25069	27640	29550	31558	35170	39115
Weight		Kg	29	40	57	97	185	287	507	740	1038	1452	1648	2207	2797	3940	4670	5780	6600	7940	9100	10150	13800

Dimensions Data — PN100/PN110/ Class600

Size		in	2	2 1/2	3	4	6	8	10	12	14	16	18	20	22	24	26	28	30	32	34	36	40
		mm	50	65	80	100	150	200	250	300	350	400	450	500	550	600	650	700	750	800	850	900	1000
L/ L1(RF/BW)		mm	292	330	356	432	559	660	787	838	889	991	1092	1194	1295	1397	1448	1549	1651	1778	1930	2083	2337
L2(RTJ)		mm	295	333	359	435	562	664	791	841	892	994	1095	1200	1305	1407	1461	1562	1664	1794	1946	2099	2366
L.O	M	mm	136	164	191	244	-	-	-	-	-	-	-	-	-	-	-	-	-	-	-	-	-
	Mo	mm	500	650	650	800	-	-	-	-	-	-	-	-	-	-	-	-	-	-	-	-	-
G.O	G	mm	-	-	220	254	360	390	450	500	520	550	635	675	728	780	810	840	870	915	951	987	1212
	Go	mm	-	-	300	400	400	400	500	500	500	500	600	600	600	600	700	700	800	800	800	1000	1000
C		mm	105	135	165	210	253	290	333	380	395	433	470	505	545	595	635	665	710	755	780	815	915
H		mm	100	115	130	162	203	257	310	350	360	413	430	490	510	570	620	690	750	780	815	840	940
Torque		N・M	168	210	360	572	912	2177	3093	4282	7458	9310	14693	20011	24785	31226	35184	38987	41832	63865	71720	89020	109900
Weight		Kg	33	43	64	124	255	487	760	984	1266	1532	2097	2640	3790	4740	5650	6760	8380	9740	11340	13300	18340

Note: 1)The maximum size of ball valve we can provide:150LB-60", 300LB-56", 600LB-56", 900LB-48".
2)Reduce bore can be selected as client's requirement.

Dimensions Data PN150/PN160/Class900

Size		in	2	2 1/2	3	4	6	8	10	12	14	16	18	20	22	24	26	28	30	32	34	36	40
		mm	50	65	80	100	150	200	250	300	350	400	450	500	550	600	650	700	750	800	850	900	1000
L(RF)		mm	368	419	381	457	610	737	838	965	1029	1130	1219	1321	-	1549	1651	1753	1880	2032	2159	2286	2283
L1(BW)		mm	368	419	381	457	610	737	838	965	1029	1130	1219	1321	-	1549	1651	1753	1880	2032	2159	2286	2100
L2(RTJ)		mm	371	422	384	460	613	740	841	968	1038	1140	1232	1334	-	1568	1673	1775	1902	2054	2188	2315	2311
L.O	M	mm	148	191	216	-	-	-	-	-	-	-	-	-	-	-	-	-	-	-	-	-	-
	Mo	mm	650	650	800	-	-	-	-	-	-	-	-	-	-	-	-	-	-	-	-		-
G.O	G	mm	-	-	255	285	370	400	450	500	520	550	600	630	-	810	850	900	980	1240	1275	1310	1420
	Go	mm	-	-	400	400	400	500	500	500	500	600	600	600	-	700	700	800	1000	1000	1000	1000	1000
C		mm	105	135	165	210	260	295	345	384	400	440	482	530	-	615	650	670	725	785	805	845	955
H		mm	110	118	130	167	251	280	340	390	442	490	500	500	-	630	650	710	780	810	850	900	980
Torque		N • M	228	263	512	946	1784	4116	5910	10137	14141	18866	22400	28544	-	43276	48580	60000	76000	90195	100460	131875	-
Weight		Kg	50	61	76	150	367	600	1027	1558	1765	2157	2860	4220	-	7150	8040	10840	12210	14992	17230	19920	24251

Dimensions Data PN250/PN260/Class1500

Size		in	2	2 1/2	3	4	6	8	10	12	14	16	18	20	22	24
		mm	50	65	80	100	150	200	250	300	350	400	450	500	550	600
L/ L1(RF/BW)		mm	368	419	470	546	705	832	991	1130	1257	1384	1537	1664	-	-
L2(RTJ)		mm	371	422	473	549	711	841	1000	1146	1276	1407	1559	1686	-	1972
L.O	M	mm	175	191	216	-	-	-	-	-	-	-	-	-	-	-
	Mo	mm	650	650	750	-	-	-	-	-	-	-	-	-	-	-
G.O	G	mm	-	-	255	285	460	520	640	720	760	820	880	900	-	920
	Go	mm	-	-	500	500	500	500	500	500	500	600	600	700	-	800
C		mm	105	138	165	215	260	300	365	420	440	480	550	620	-	700
H		mm	105	120	130	167	270	300	360	423	460	510	600	650	-	720
Torque		N • M	390	448	931	1524	2934	7215	10990	16103	24518	29630	34392	40918	-	65351
Weight		Kg	53	63	98	200	485	827	1507	2272	2880	4120	6260	9120	-	14320

Dimensions Data PN420/Class2500

Size		in	2	2 1/2	3	4	6	8	10	12
		mm	50	65	80	100	150	200	250	300
L/ L1(RF/BW)		mm	451	508	578	673	914	1022	1270	1422
L2(RTJ)		mm	454	514	584	683	927	1038	1292	1445
L.O	M	mm	168	190	205	-	-	-	-	-
	Mo	mm	800	1000	1000	-	-	-	-	-
G.O	G	mm	170	210	250	290	340	470	490	615
	Go	mm	350	450	500	500	600	600	700	800
C		mm	120	140	175	225	260	380	450	515
H		mm	125	160	200	230	250	340	425	480
Torque		N • M	589	736	1577	1965	5501	11786	13222	20075
Weight		Kg	90	152	200	385	778	1352	2537	3667

Note: 1)The maximum size of ball valve we can provide:900LB-48".
2)Reduce bore can be selected as client's requirement.

Applicable Standards

Design & Manufacture: API 6D/ISO 14313, ASME B16.34
Connection Dimension: ASME B16.5, ASME B16.25
Fire Safe: API 607/ISO 10497
Inspection & Test: API 6D, ISO 5280, API 598

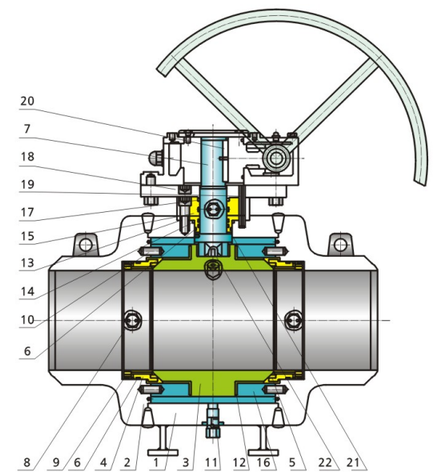

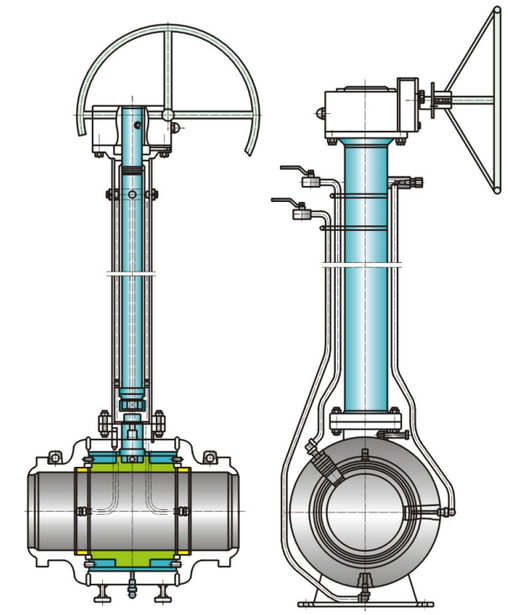

Stem Extension Type

Main Parts List

No	Part Name	ASTM Material		
		Carbon Steel	Stainless Steel	Cryogenic Steel
1	Body	A105N	A182-F316	A350-LF2
2	Bonnet	A105N	A182-F316	A350-LF2
3	Ball	A105+ENP	A182-F316	A350-LF2+ENP
4	Seat	A105+ENP	A182-F316	A350-LF2+ENP
5	Sealing Ring	RPTFE	RPTFE	RPTFE
6	O-Ring	VITON	VITON	VITON
7	Stem	A182-F6A	A182-F316	A182-F304
8	Seat Grease Injection Valve	Carbon Steel	Stainless Steel	Stainless Steel
9	Spring	Inconel X-750	Inconel X-750	Inconel X-750
10	Straight Pin	Carbon Steel	Stainless Steel	Stainless Steel
11	Drain Plug	Carbon Steel	Stainless Steel	Stainless Steel
12	Ball Lubricating Bearing	SS+PTFE	SS+PTFE	SS+PTFE
13	Screw	A182-F304	A182-F316	A182-F304
14	Bonnet Gasket	Graphite	Graphite	Graphite
15	Support Cover	A105	A182-F316	A350-LF2
16	Support Board	A105	A182-F316	A350-LF2
17	Packing	Flexible Graphite	Flexible Graphite	Flexible Graphite
18	Connection Pad	A105	A182-F316	A350-LF2
19	Spring Pin	A182-F304	A182-F316	A182-F304
20	Flat Key	Carbon Steel	Stainless Steel	Stainless Steel
21	Stem Gasket	Graphite	Graphite	Graphite
22	Static-free Spring	SS304	SS316	SS304

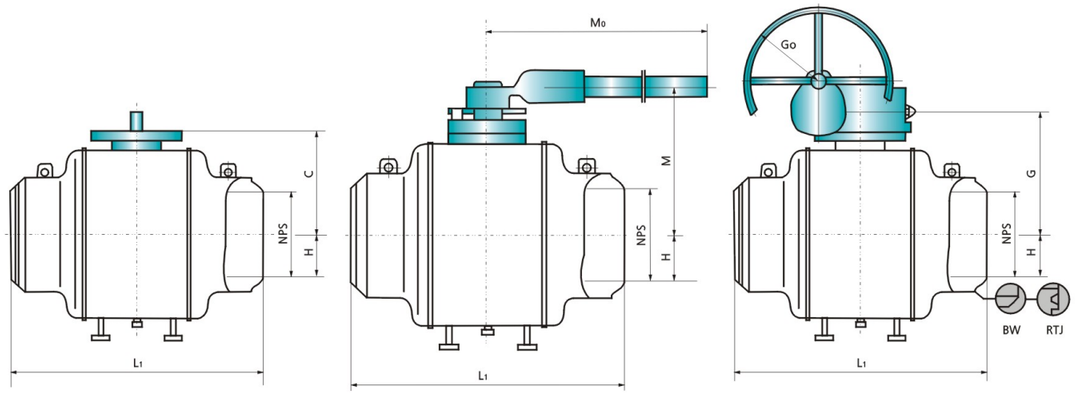

Dimensions Data — PN16/PN20/Class150

Size		in	2	2 1/2	3	4	6	8	10	12	14	16	18	20	22	24	26	28	30	32	34	36	40
		mm	50	65	80	100	150	200	250	300	350	400	450	500	550	600	650	700	750	800	850	900	1000
L(RF)		mm	178	191	203	229	394	457	533	610	686	762	864	914	991	1067	1143	1245	1295	1372	1473	1524	1753
L1(BW)		mm	216	241	283	305	457	521	559	635	762	838	914	991	1092	1143	1245	1346	1397	1524	1626	1727	1956
L.O	M	mm	161	178	189	214	265	-	-	-	-	-	-	-	-	-	-	-	-	-	-	-	-
	Mo	mm	250	300	350	500	800	-	-	-	-	-	-	-	-	-	-	-	-	-	-	-	-
G.O	G	mm	-	-	185	235	325	390	445	520	550	580	605	610	670	725	760	790	825	870	910	950	1005
	Go	mm	-	-	280	280	300	400	400	500	500	600	600	600	600	700	700	700	700	700	700	700	700
C		mm	105	130	155	200	250	278	323	340	375	410	440	495	525	585	630	645	690	740	760	810	895
H		mm	100	110	125	160	185	222	280	303	330	355	390	430	475	520	560	650	700	745	775	805	900
Torque		N • M	57	71	95	192	485	832	1105	1655	2695	3164	3793	5500	6650	7529	8693	10770	12365	14070	21148	22987	26059
Weight		Kg	28	39	49	88	160	248	379	571	759	1150	1192	1769	2367	3450	4050	4830	5960	7480	8032	9100	14100

Dimensions Data — PN25/PN40/PN50/Class300

Size		in	2	2 1/2	3	4	6	8	10	12	14	16	18	20	22	24	26	28	30	32	34	36	40
		mm	50	65	80	100	150	200	250	300	350	400	450	500	550	600	650	700	750	800	850	900	1000
L(RF)		mm	216	241	283	305	457	502	568	648	762	838	914	991	1092	1143	1245	1346	1397	1524	1626	1727	1956
L1(BW)		mm	216	241	283	305	457	521	559	635	762	838	914	991	1092	1143	1245	1346	1397	1524	1626	1727	1956
L.O	M	mm	130	142	191	200	226	242	-	-	-	-	-	-	-	-	-	-	-	-	-	-	-
	Mo	mm	250	350	400	500	800	1000	-	-	-	-	-	-	-	-	-	-	-	-	-	-	-
G.O	G	mm	-	-	185	235	325	390	445	520	550	580	605	610	670	725	760	790	825	870	910	950	1005
	Go	mm	-	-	280	280	300	400	400	500	500	600	600	600	600	700	700	700	700	700	700	700	700
C		mm	105	130	155	200	250	278	333	360	395	433	460	505	530	590	635	645	700	750	760	810	905
H		mm	100	110	125	160	203	232	298	333	350	398	410	470	485	550	585	670	730	770	800	825	920
Torque		N • M	99	124	212	335	544	1250	1736	2388	3224	5139	7970	10570	12140	17240	20340	25069	27640	29550	31558	35170	39115
Weight		Kg	29	40	57	97	185	287	507	740	1038	1452	1648	2207	2797	3940	4670	5780	6600	7940	9100	10150	13800

Note: 1)The maximum size of ball valve we provide can be reached to 56";
2)Reduce bore can be selected as client's requirement.

Dimensions Data — PN100/PN110/ Class600

Size		in	2	2 1/2	3	4	6	8	10	12	14	16	18	20	22	24	26	28	30	32	34	36	40
		mm	50	65	80	100	150	200	250	300	350	400	450	500	550	600	650	700	750	800	850	900	1000
L/ L1(RF/BW)		mm	292	330	356	432	559	660	787	838	889	991	1092	1194	1295	1397	1448	1549	1651	1778	1930	2083	2337
L2(RTJ)		mm	295	333	359	435	562	664	791	841	892	994	1095	1200	1305	1407	1461	1562	1664	1794	1946	2099	2366
L.O	M	mm	136	164	191	244	-	-	-	-	-	-	-	-	-	-	-	-	-	-	-	-	-
	Mo	mm	500	650	650	800	-	-	-	-	-	-	-	-	-	-	-	-	-	-	-	-	-
G.O	G	mm	-	-	220	254	360	390	450	500	520	550	635	675	728	780	810	840	870	915	951	987	1212
	Go	mm	-	-	300	400	400	400	500	500	500	500	600	600	600	600	700	700	800	800	800	1000	1000
C		mm	105	135	165	210	253	290	333	380	395	433	470	505	545	595	635	665	710	755	780	815	915
H		mm	100	115	130	162	203	257	310	350	360	413	430	490	510	570	620	690	750	780	815	840	940
Torque		N • M	168	210	360	572	912	2177	3093	4282	7458	9310	14693	20011	24785	31226	35184	38987	41832	63865	71720	89020	109900
Weight		Kg	33	43	64	124	255	487	760	984	1266	1532	2097	2640	3790	4740	5650	6760	8380	9740	11340	13300	18340

Dimensions Data — PN150/PN160/Class900

Size		in	2	2 1/2	3	4	6	8	10	12	14	16	18	20	22	24	26	28	30	32	34	36	40
		mm	50	65	80	100	150	200	250	300	350	400	450	500	550	600	650	700	750	800	850	900	1000
L(RF)		mm	368	419	381	457	610	737	838	965	1029	1130	1219	1321	-	1549	1651	1753	1880	2032	2159	2286	2283
L1(BW)		mm	368	419	381	457	610	737	838	965	1029	1130	1219	1321	-	1549	1651	1753	1880	2032	2159	2286	2100
L2(RTJ)		mm	371	422	384	460	613	740	841	968	1038	1140	1232	1334	-	1568	1673	1775	1902	2054	2188	2315	2311
L.O	M	mm	148	191	216	-	-	-	-	-	-	-	-	-	-	-	-	-	-	-	-	-	-
	Mo	mm	650	800	800	-	-	-	-	-	-	-	-	-	-	-	-	-	-	-	-	-	-
G.O	G	mm	-	-	255	285	370	400	450	500	520	550	600	630	-	810	850	900	980	1240	1275	1310	1420
	Go	mm	-	-	400	400	400	500	500	500	500	600	600	600	-	700	700	800	1000	1000	1000	1000	1000
C		mm	105	135	165	210	260	295	345	384	400	440	482	530	-	615	650	670	725	785	805	845	955
H		mm	110	118	130	167	251	280	340	390	442	490	500	500	-	630	650	710	780	810	850	900	980
Torque		N • M	228	263	512	946	1784	4116	5910	10137	14141	18866	22400	28544	-	43276	48580	60000	76000	90195	100460	131875	-
Weight		Kg	50	61	76	150	367	600	1027	1558	1765	2157	2860	4220	-	7150	8040	10840	12210	14992	17230	19920	24251

Dimensions Data — PN250/PN260/Class1500

L(RF)		in	2	2 1/2	3	4	6	8	10	12	14	16	18	20	22	24
		mm	50	65	80	100	150	200	250	300	350	400	450	500	550	600
L/ L1(RF/BW)		mm	368	419	470	546	705	832	991	1130	1257	1384	1537	1664	-	-
L2(RTJ)		mm	371	422	473	549	711	841	1000	1146	1276	1407	1559	1686	-	1972
L.O	M	mm	175	191	216	-	-	-	-	-	-	-	-	-	-	-
	Mo	mm	650	650	750	-	-	-	-	-	-	-	-	-	-	-
G.O	G	mm	-	-	255	285	460	520	640	720	760	820	880	900	-	920
	Go	mm	-	-	500	500	500	500	500	500	500	600	600	700	-	800
C		mm	105	138	165	215	260	300	365	420	440	480	550	620	-	700
H		mm	105	120	130	167	270	300	360	423	460	510	600	650	-	720
Torque		N • M	390	448	931	1524	2934	7215	10990	16103	24518	29630	34392	40918	-	65351
Weight		Kg	53	63	98	200	485	827	1507	2272	2880	4120	6260	9120	-	14320

Note: Reduce bore can be selected as client's requirement.

Main Structural Features

1. The product is applied to severe working conditions for a wide range of temperature, up to 500℃（932°F) and corrosive fluid.
2. The stainless steel seat is firmed by the spring. This kind of design can be applied to various operating conditions, not only improves the seal performance, but also has a long service life and non-maintenance.
3. The spring is installed against the seat which ensures the ball have a close contact with the seat. So in a wide range of temperature, or under high pressure difference and high frequency, the low torque value leads to cost-effective.
4. The ball can be connected closely to the seat with excellent sealing performance and precise technology.
5. After the surface-hardening treatment, the seat can be more widely used on cement, paper pulp, corrosive fluid, etc., and extends its service life. In addition, the fixed ball valve is suitable for the medium containing dust.

Applicable Standards

Design & Manufacture: API 6D
Connection Dimension: ASME B16.5
Fire Safe: API 6FA
Inspection & Test: ISO 5208, API 598

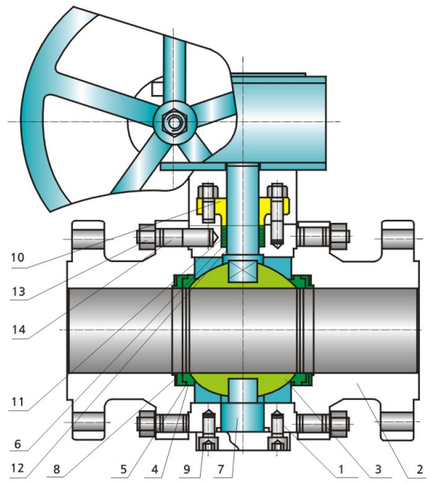

Main Parts List

No	Part Name	ASTM Material		
		Carbon Steel	Stainless Steel	Cryogenic Steel
1	Body	A216-WCB	A351-CF8M	A352-LCB
2	Bonnet	A216-WCB	A351-CF8M	A352-LCB
3	Ball	A182-F6A+WC[1)]	A182-F316+WC[1)]	A350-LF2+WC[1)]
4	Seat	A105+WC[1)]	A182-F316+WC[1)]	A350-LF2+WC[1)]
5	Sealing Ring	Graphite	Graphite	Graphite
6	Upper Stem	A182-F6A	A182-F316	A182-F304
7	Lower Stem	A182-F6A	A182-F316	A182-F304
8	Spring	Inconel X-750	Inconel X-750	Inconel X-750
9	Screw	A193-B7	A193-B8	A320-L7
10	Packing Gland	A216-WCB	A351-CF8M	A352-LCB
11	Packing	Graphite	Graphite	Graphite
12	Bushing	SS316+PTFE	SS316+PTFE	SS316+PTFE
13	Nut	A194-2H	A194-8	A194-4
14	Stud	A193-B7	A193-B8	A320-L7

Note: 1)Stellited coated is available.

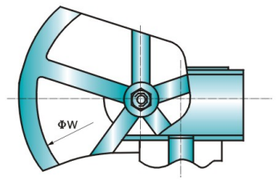

Gear Operator

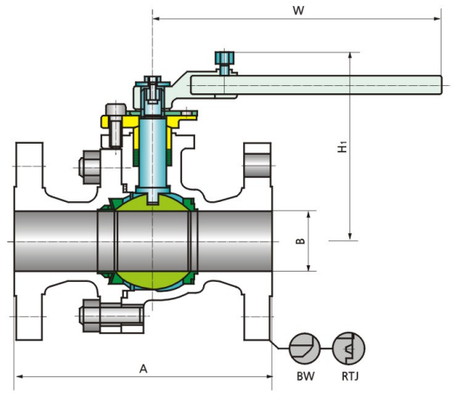

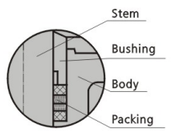

Flexible graphite is of heat-resistant and flame-resistant.

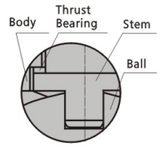

If the packing gets loose, the convex side of the stem can prevent itself from being blow out.

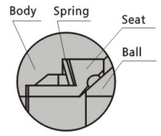

The spring can relieve the pipe stress and heat expansion to ensure the stability of the operation

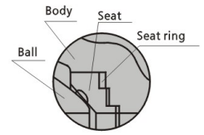

The ball valve can maintain a stable operation with working temperature range -29℃~500℃ by the matched seat ring and body.

Dimensions Data — PN16/PN20/Class 150

NPS inch	DN	A mm	B mm	H1 mm	W mm	Weight kg	T N.m	NPS inch	DN	A mm	B mm	H1 mm	W mm	Weight kg	T N.m
1/2	15	108	13	60	200	2.5	5	2 1/2	65	191	65	160	600	18	80
3/4	20	117	19	65	200	3.5	8	3	80	203	76	190	600	25	120
1	25	127	25	75	250	5.8	11	4	100	229	100	210	700	38	150
1 1/2	40	165	32	98	350	7.5	25	★6	150	394	150	360	460	106	600
2	50	178	51	128	350	11	45	★8	200	457	201	523	600	180	1050

Dimensions Data — PN25/PN40/Class 300

NPS inch	DN	A mm	B mm	H1 mm	W mm	Weight kg	T N.m	NPS inch	DN	A mm	B mm	H1 mm	W mm	Weight kg	T N.m
1/2	15	140	13	60	200	3	11	2 1/2	65	241	65	160	600	30	160
3/4	20	152	19	65	200	5	18	3	80	383	76	190	600	40	221
1	25	165	25	75	250	8	40	4	100	305	100	210	700	65	392
1 1/2	40	190	32	98	350	11	57	★6	150	457	150	360	460	122	1240
2	50	216	51	128	350	18	90	★8	200	502	201	523	600	246	2100

Dimensions Data — PN100/PN110/Class 600

NPS inch	DN	A mm	B mm	H1 mm	W mm	Weight kg	T N.m	NPS inch	DN	A mm	B mm	H1 mm	W mm	Weight kg	T N.m
2	50	292	51	150	450	28	266	3	80	356	76	210	700	40	644
2 1/2	65	330	65	180	450	45	504	★4	100	432	100	270	600	65	1078

Note: ★Gear Operation

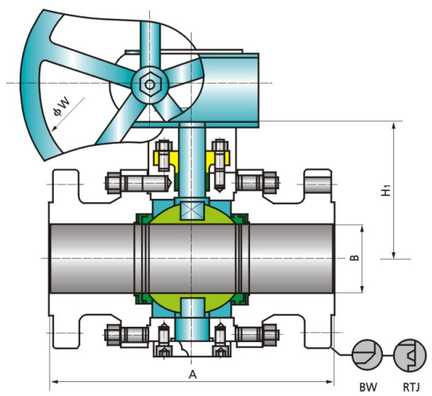

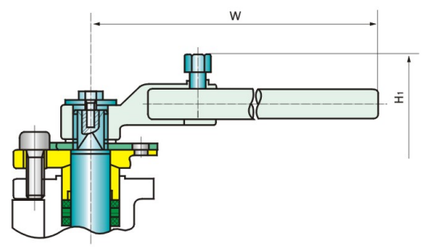

Lever Operator

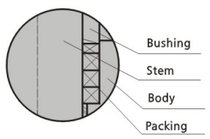

Flexible graphite is of heat-resistant and flame-resistant.

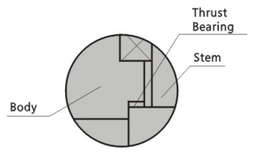

If the packing gets loose, the convex side of the stem can prevent itself from being blow out.

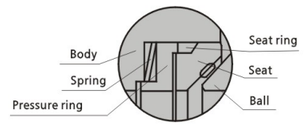

The ball valve can maintain a stable operation with working temperature range -29℃~500℃ by the matched seat ring and body.

Dimensions Data — PN16/PN20/Class 150

NPS inch	DN	A mm	B mm	H1 mm	W mm	WT kg	T N.m	NPS inch	DN	A mm	B mm	H1 mm	W mm	WT kg	T N.m
2	50	178	51	172	350	16	72	★10	250	533	252	350	600	280	1437
2½	65	191	65	184	400	26	92	★12	300	610	303	380	600	460	2052
3	80	203	76	196	500	35	123	★14	350	686	334	415	600	580	3234
4	100	229	100	225	650	51	240	★16	400	762	385	450	700	790	3797
★6	150	394	150	290	460	103	640	★18	450	864	436	490	700	930	4574
★8	200	457	201	320	600	170	1082	★20	500	914	487	540	700	1288	6875

Dimensions Data — PN20/PN25/PN50/Class 300

NPS inch	DN	A mm	B mm	H1 mm	W mm	Weight kg	T N.m	NPS inch	DN	A mm	B mm	H1 mm	W mm	Weight kg	T N.m
2	50	216	51	172	350	22	119	★10	250	568	252	356	600	310	2170
2½	65	241	65	184	400	34	149	★12	300	648	303	388	600	512	2985
3	80	283	76	196	500	45	255	★14	350	762	334	425	700	612	4030
4	100	305	100	225	650	92	402	★16	400	838	385	466	700	1010	6424
★6	150	457	150	295	600	180	680	★18	450	914	436	502	700	1183	99 63
★8	200	502	201	325	600	246	1620	★20	500	991	487	550	760	1383	13213

Note: ★Gear Operation

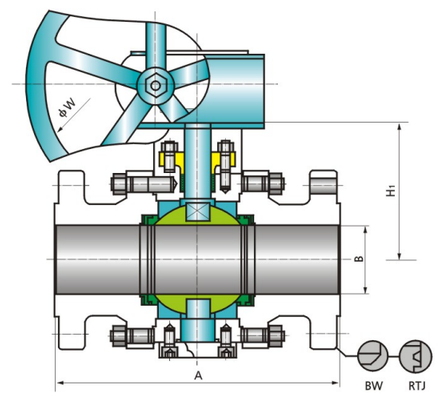

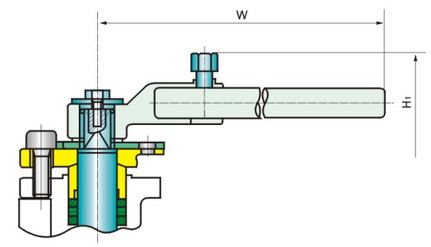

Lever Operator

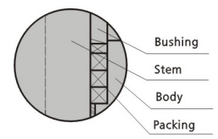

Flexible graphite is of heat-resistant and flame-resistant.

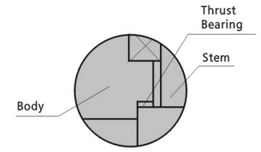

If the packing gets loose, the convex side of the stem can prevent itself from being blow out.

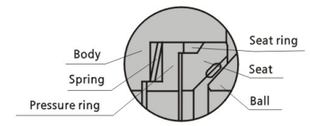

The ball valve can maintain a stable operation with working temperature range -29℃~500℃ by the matched seat ring and body.

Dimensions Data — PN100/PN110/Class 600

NPS inch	DN	A mm	B mm	H1 mm	W mm	Weight kg	T N.m	NPS inch	DN	A mm	B mm	H1 mm	W mm	Weight kg	T N.m
2	50	292	51	185	500	30	148	★10	250	787	252	362	700	600	4021
3	80	356	76	205	600	56	200	★12	300	838	303	398	700	830	5567
4	100	432	100	235	600	84	460	★14	350	889	334	435	700	1140	9695
★6	150	559	150	300	600	230	908	★16	400	991	385	478	760	1530	12103
★8	200	660	201	350	600	350	2560	★18	450	1092	436	522	760	2120	19031

Dimensions Data — PN150/PN160/Class 900

NPS inch	DN	A mm	B mm	H1 mm	W mm	Weight kg	T N.m	NPS inch	DN	A mm	B mm	H1 mm	W mm	Weight kg	T N.m
2	50	368	49	190	650	45	296	★8	200	737	201	340	600	520	5351
3	80	381	74	208	700	78	342	★10	250	838	252	372	700	810	7683
★4	100	457	100	238	600	120	1230	★12	300	965	303	420	700	1050	13178
★6	150	610	150	312	600	255	2319	★14	350	1029	322	465	760	1386	18383

Dimensions Data — PN250/PN260/Class 1500

NPS inch	DN	A mm	B mm	H1 mm	W mm	Weight kg	T N.m	NPS inch	DN	A mm	B mm	H1 mm	W mm	Weight kg	T N.m
2	50	368	49	190	650	45	507	★6	150	705	144	315	600	430	3814
3	80	470	74	210	750	116	1080	★8	200	832	192	350	600	630	9380
★4	100	546	100	240	600	170	1981	★10	250	991	239	388	700	1188	14466

Note: ★Gear Operation

Top Entry Floating Ball Valve

Features and Application

The top entry ball valve is designed to facilitate the maintenance. When necessary, the valve can be mended without removing from the pipline, instead of loosing the bolts and nuts, and then taking away the bonnet together with the stem. Then the ball can be taken out along with the seat. This feature saves the precious time for you as well as reduces the cost to the minimum.

Applicable Standards

Design & Manufacture: API 6D
Connection Dimension: ASME B16.5
Fire Safe: API 6FA
Inspection & Test: API 6D, ISO 5208, API 598

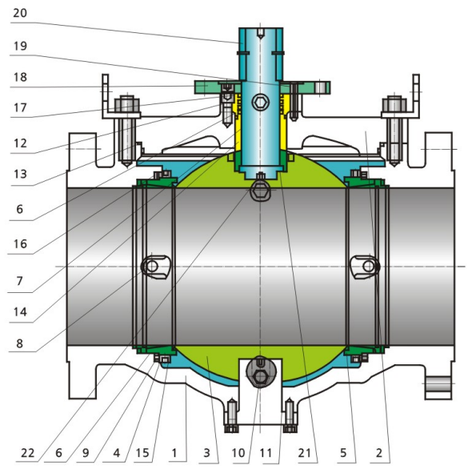

Main Parts List

No	Part Name	ASTM Material		
		Carbon Steel	Stainless Steel	Cryogenic Steel
1	Body	A216-WCB	A351-CF8M	A352-LCB
2	Body Cap	A216-WCB	A351-CF8M	A352-LCB
3	Ball	A105+ENP	A182-F316	A350-LF2+ENP
4	Seat	A105+ENP	A182-F316+ENP	A350-LF2+ENP
5	Seat Insert	Nylon	Nylon	Nylon
6	O-ring	VITON	VITON	VITON
7	Stem	A182-F6A	A182-F316	A182-F304
8	Injection Valve	Carbon Steel	Stainless Steel	Stainless Steel
9	Spring	Inconel X-750	Inconel X-750	Inconel X-750
10	Drain Valve	Carbon Steel	Stainless Steel	Stainless Steel
11	Ball Lubricating Bearing	316+PTFE	316+PTFE	316+PTFE
12	Screw	A193-B7	A193-B8	A320-L7
13	Body Gasket	316+Graphite	316+Graphite	316+Graphite
14	Gland	A216-WCB	A351-CF8M	A352-LCB
15	Seat Retainer Ring	A105+ENP	A182-F316	A350-LF2+ENP
16	Spring Support Cover	A105+ENP	A182-F316	A350-LF2+ENP
17	Packing	Graphite	Graphite	Graphite
18	Connection Plate	A216-WCB	A351-CF8M	A352-LCB
19	Elastic Cylindrical Pin	Stainless Steel	Stainless Steel	Stainless Steel
20	Flat Key	A29 1025	A29 1025	A29 1025
21	Stem Bearing	316+Graphite	316+Graphite	316+Graphite
22	Antistatic	SS	SS	SS

Note: Materials could be choosed according to customers'requirement & working condition.

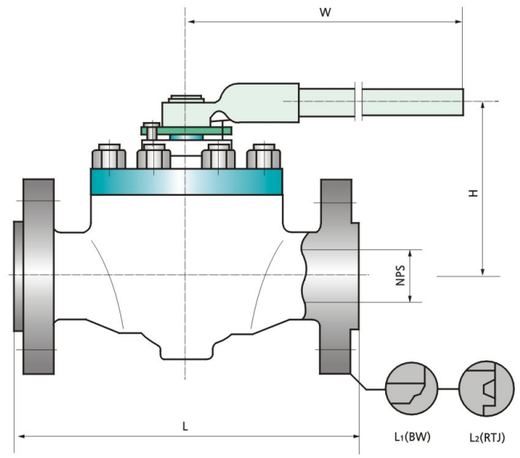

Dimensions Data — PN16/PN20/Class150

Size	in	1/2	3/4	1	1 1/2	2	2 1/2	3	4	6	8	10
	mm	15	20	25	40	50	65	80	100	150	200	250
L(RF)	mm	165	191	216	241	292	330	356	432	559	660	787
L1(BW)	mm	165	191	216	241	292	330	356	432	559	660	787
H	mm	85	90	99	126	140	165	178	230	310	350	400
W	mm	140	140	150	200	250	300	350	500	800	1000	1000
Weight	Kg	5	8	10	16	25	40	70	85	190	410	680

Dimensions Data — PN25/PN40/Class300

Size	in	1/2	3/4	1	1 1/2	2	2 1/2	3	4	6	8
	mm	15	20	25	40	50	65	80	100	150	200
L(RF)	mm	165	191	216	241	292	330	356	432	559	660
L1(BW)	mm	165	191	216	241	292	330	356	432	559	660
H	mm	85	90	99	126	140	165	178	230	310	350
W	mm	140	140	150	200	250	300	350	500	800	1000
Weight	Kg	6	9. 5	11	19	29	45	75	95	205	445

Dimensions Data — PN100/PN110/Class600

Size	in	1/2	3/4	1	1 1/2	2	2 1/2	3	4
	mm	15	20	25	40	50	65	80	100
L/ L1(RF/BW)	mm	165	191	216	241	292	330	356	432
L2(RTJ)	mm	163.5	191	216	241	295	333	359	435
H	mm	79	83	114	125	156	172	220	250
W	mm	140	140	200	250	300	350	500	650
Weight	Kg	7	10	12	22	31	52	80	105

Note: Reduce bore can be selected as client's requirement.

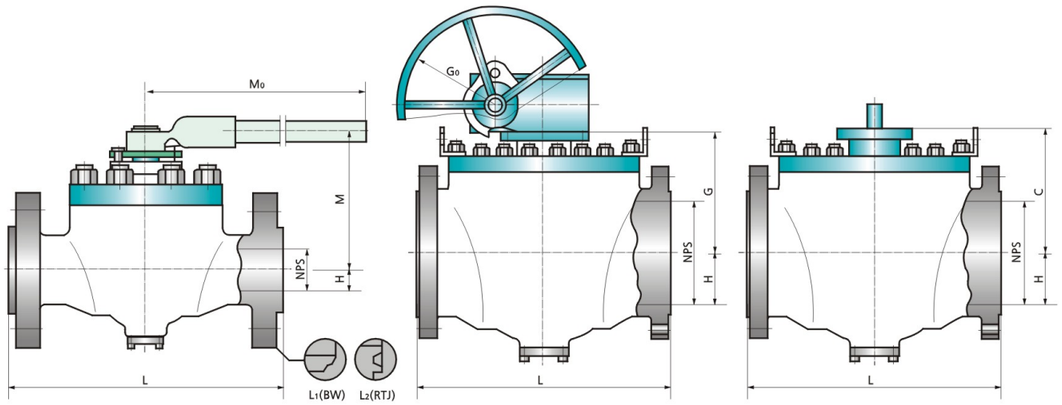

Dimensions Data — PN16/PN20/Class150

Size		in	1 1/2	2	2 1/2	3	4	6	8	10	12	14	16	18	20	22	24	26	28	30	32	34	36	40
		mm	40	50	65	80	100	150	200	250	300	350	400	450	500	550	600	650	700	750	800	850	900	1000
L/L1(RF/BW)		mm	260	292	330	356	432	559	660	787	838	889	991	1092	1194	1295	1397	1448	1549	1651	1778	1930	2083	2337
L2(RTJ)		mm	264	295	333	359	435	562	664	791	841	892	994	1095	1200	1305	1407	1461	1562	1664	1794	1946	2099	2366
L.O	M	mm	206	231	245	273	297	351	388	-	-	-	-	-	-	-	-	-	-	-	-	-	-	-
	Mo	mm	300	300	400	450	500	800	1000	-	-	-	-	-	-	-	-	-	-	-	-	-	-	-
G.O	G	mm	-	-	-	-	-	338	375	415	452	473	498	545	603	688	742	750	797	835	896	926	950	1036
	Go	mm	-	-	-	-	-	300	400	400	500	500	600	600	600	600	700	700	700	700	700	700	700	700
C		mm	145	170	182	212	236	271	308	348	385	398	423	470	528	578	630	635	685	720	760	790	810	900
H		mm	63	78	90	100	120	162	207	244	290	370	405	445	540	550	595	640	680	745	770	800	820	850
Torque		N・M	40	57	71	95	192	485	832	1105	1655	2695	3164	3793	5500	6650	7529	8693	10770	12365	14070	21148	22987	26059
Weight		Kg	28	40	48	65	110	210	375	462	660	930	1354	2100	2680	3400	4180	4850	5850	6400	7850	8600	9850	14500

Dimensions Data — PN25/PN40/PN50/Class300

Size		in	1 1/2	2	2 1/2	3	4	6	8	10	12	14	16	18	20	22	24	26	28	30	32	34	36	40
		mm	40	50	65	80	100	150	200	250	300	350	400	450	500	550	600	650	700	750	800	850	900	1000
L/L1(RF/BW)		mm	260	292	330	356	432	559	660	787	838	889	991	1092	1194	1295	1397	1448	1549	1651	1778	1930	2083	2337
L2(RTJ)		mm	264	295	333	359	435	562	664	791	841	892	994	1095	1200	1305	1407	1461	1562	1664	1794	1946	2099	2366
L.O	M	mm	206	231	245	273	297	351	388	-	-	-	-	-	-	-	-	-	-	-	-	-	-	-
	Mo	mm	300	300	400	450	500	800	1000	-	-	-	-	-	-	-	-	-	-	-	-	-	-	-
G.O	G	mm	-	-	-	-	-	338	375	423	460	481	515	555	648	712	758	786	845	856	921	951	1008	1095
	Go	mm	-	-	-	-	-	300	400	400	500	500	600	600	600	600	700	700	700	700	700	700	700	700
C		mm	145	170	182	212	236	271	308	348	385	398	436	478	536	600	645	650	708	720	785	815	848	935
H		mm	63	78	90	100	120	162	207	244	290	370	405	445	537	550	595	640	680	745	770	800	800	850
Torque		N・M	50	99	124	212	335	544	1250	1736	2388	3224	5139	7970	10570	12140	17240	20340	25069	27640	29550	31558	35170	39115
Weight		Kg	30	40	47	65	125	277	407	484	664	1060	1450	2200	3400	1950	4400	5410	6640	7780	9550	11230	13180	17310

Note: 1)The maximum size of ball valve we provide can be reached to 56";
2)Reduce bore can be selected as client's requirement.

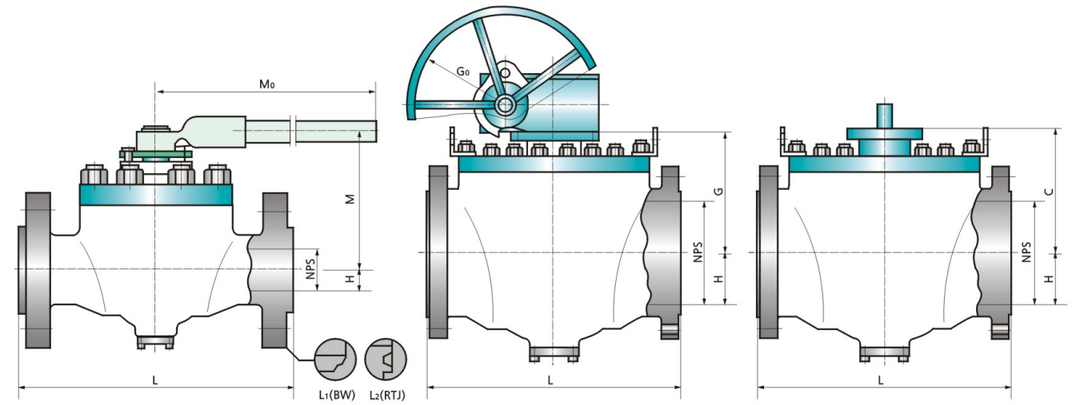

Dimensions Data — PN100/PN110/ Class600

Size		in	1 1/2	2	2 1/2	3	4	6	8	10	12	14	16	18	20	22	24	26	28	30	32	34	36	40
		mm	40	50	65	80	100	150	200	250	300	350	400	450	500	550	600	650	700	750	800	850	900	1000
L(RF)		mm	260	292	330	356	432	559	660	787	838	889	991	1092	1194	1295	1397	1448	1549	1651	1778	1930	2083	2337
L1(BW)		mm	264	295	333	359	435	562	664	791	841	892	994	1095	1200	1305	1407	1461	1562	1664	1794	1946	2099	2366
L.O	M	mm	206	231	243	273	316	-	-	-	-	-	-		-	-	-	-	-	-	-	-	-	-
	Mo	mm	400	500	600	700	800	-	-	-	-	-	-		-	-	-	-	-	-	-	-	-	-
G.O	G	mm	-	-	-	-	303	338	383	423	460	500	605	642	700	781	815	915	930	1030	1065	1105	1180	1325
	Go	mm	-	-	-	-	400	400	400	500	500	500	500	600	600	600	600	700	700	800	800	800	1000	1000
C		mm	145	170	182	212	236	271	308	348	385	425	493	530	588	645	679	755	770	870	895	945	1020	1165
H		mm	63	78	90	100	120	162	207	244	290	365	430	475	540	580	620	655	730	800	830	870	900	960
Torque		N・M	130	168	210	360	572	912	2177	3093	4282	7458	9310	14693	20011	24785	31226	35184	38987	41832	63865	71720	89020	109900
Weight		Kg	35	50	59	75	155	290	480	710	1050	1530	1980	2460	3420	4030	5010	6340	8080	9150	10760	12750	15200	19210

Dimensions Data — PN150/PN160/Class900

Size		in	1 1/2	2	2 1/2	3	4	6	8	10	12	14	16	18	20	22	24	26	28	30	32	34	36
		mm	40	50	65	80	100	150	200	250	300	350	400	450	500	550	600	650	700	750	800	850	900
L/ L1(RF/BW)		mm	362	368	419	381	457	610	737	838	965	1029	1130	1219	1321	1423	1549	1651	1753	1880	2032	2159	2286
L2(RTJ)		mm	365	371	422	384	460	613	740	841	968	1038	1140	1232	1334	1439	1568	1673	1775	1902	2054	2188	2315
L.O	M	mm	234	251	278	305	-	-	-	-		-	-		-	-	-	-	-		-	-	-
	Mo	mm	650	650	650	800	-	-	-	-		-	-		-	-	-	-	-		-	-	-
G.O	G	mm	-	-	-	-	335	396	436	445	535	590	625	702	801	910	953	995	1053	1110	1160	1206	1260
	Go	mm	-	-	-	-	400	400	500	500	500	500	600	600	600	700	700	700	800	800	1000	1000	1000
C		mm	173	190	202	225	268	321	361	368	460	478	513	590	665	750	793	835	893	950	1000	1043	1096
H		mm	68	83	98	110	127	170	225	260	310	395	450	505	565	620	660	685	740	830	880	930	960
Torque		N・M	163	228	263	512	946	1784	4116	5910	10137	14141	18866	22400	28544	42427	43276	48580	60000	76000	90195	100460	131875
Weight		Kg	50	67	75	90	185	380	620	880	1360	1910	2790	3740	4600	6150	7850	10900	12500	14150	17100	18570	21000

Note: Reduce bore can be selected as client's requirement.

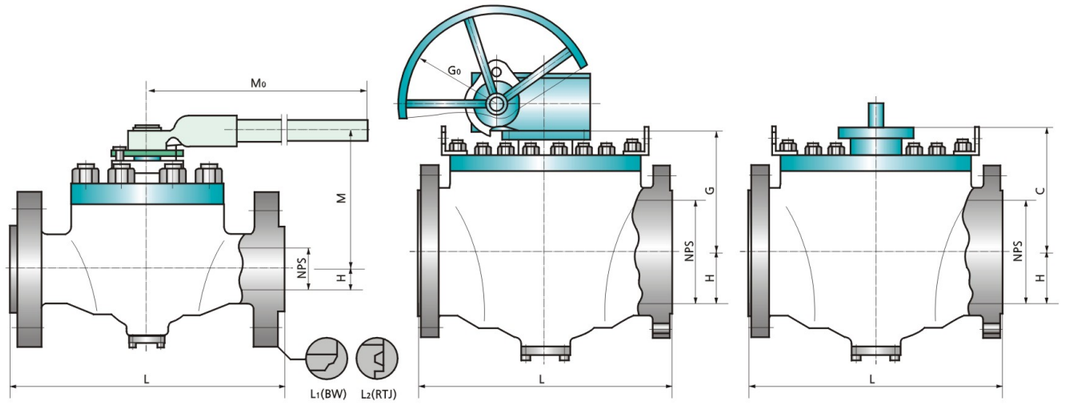

Dimensions Data — PN250/PN260/Class1500

Size		in	1 1/2	2	2 1/2	3	4	6	8	10	12	14	16	18	20	22	24
		mm	40	50	65	80	100	150	200	250	300	350	400	450	500	550	600
L/ L1(RF/BW)		mm	362	368	419	470	546	705	832	991	1130	1257	1384	1537	1664	1820	-
L2(RTJ)		mm	365	371	422	473	549	711	841	1000	1146	1276	1407	1559	1686	1842	1972
L.O	M	mm	234	251	278	-	-	-	-	-	-	-	-	-	-	-	-
	Mo	mm	700	800	800	-	-	-	-	-	-	-	-	-	-	-	-
G.O	G	mm	-	-	-	310	357	436	505	568	663	705	755	849	941	1005	1038
	Go	mm	-	-	-	500	500	500	500	500	500	500	600	600	700	800	800
C		mm	173	190	202	243	290	361	430	493	553	593	643	713	805	845	878
H		mm	68	83	98	110	142	188	250	300	350	440	460	560	615	695	720
Torque		N・M	-	390	448	931	1524	2934	7215	10990	16103	24518	29630	34392	40918	46075	65351
Weight		Kg	50	67	75	130	260	560	870	1380	2290	2890	4700	5985	7770	10240	12980

Dimensions Data — PN420/Class2500

Size		in	1 1/2	2	2 1/2	3	4	6	8	10	12
		mm	40	50	65	80	100	150	200	250	300
L/ L1(RF/BW)		mm	384	451	508	578	673	914	1022	1270	1422
L2(RTJ)		mm	387	454	514	584	683	927	1038	1292	1445
L.O	M	mm	269	291	305	-	-	-	-	-	-
	Mo	mm	700	800	1000	-	-	-	-	-	-
G.O	G	mm	-	-	-	349	411	487	572	625	695
	Go	mm	-	-	-	500	500	600	600	700	700
C		mm	208	230	258	282	336	375	460	513	583
H		mm	75	95	105	128	165	245	315	350	410
Torque		N・M	320	589	736	1577	1965	5501	11786	13222	20075
Weight		Kg	68	122	167	250	468	950	1790	2650	4300

Note: Reduce bore can be selected as client's requirement.

Structure Characteristics

1. The material of compression parts is capable of enduring the expansion and shrinkage resulted from the temperature variation of the medium; The seal structure is free from permanent deformation when temperature changes. In order to apply to the working condition(100℃below), valve componets shall be subject to sub-zero treatment before machining finished. Namely, we should have the componets cooled in the liquid nitrogen box for 1-2hours when them reache to -196℃. Then, place them under the normal temperature, and do in this way twice.
2. The long-necked bonnet is designed, in some extent, for ensuring the excellent sealing perfomce of packing when suffering the low temperature.Besides, it can be wound with cold insulating materials to prevent the loss of cold energy.The length of neck (see the drawing on the left) depends on the service temperature and the sickness of cold insulating materials. When sealing Perfomance is getting reducing, the oil seal layers should be formed up in the middle of packing box(see combined packing structure) through grease fitting to lower the differential pressure of packing box and enhance the dependability of seal.
3. To service in the condition of 100℃ below, the materials of stem shall be treated with chromeplating and nitriding to rasie the surface hardness of it and the reability of seal.
4. Cryogenic ball valve is structured to avoid abnormal pressure rising. As the medium becomes gasified and rapidly expanded in volume, the pressure goes extremely high, however, if the middle cavity and the inlet side can be communicated, or a relief can be mounted at the inlet side of valve, thus the safe operation of valve can be guaranteed.
5. The gasket used on the cryogenic ball valve may exert a dependable sealing and restore on any condition.

Technical Standard

Standard	API
Design codes	ASME B16.34
Applications of cryoqenic technology	BS 6364
Pressure-temperature rating	ANSI B16.34
Face to face dimension	ASME B16.10
Flange	ASME B16.5
Test and Inspection	API 598*

Cryogenic ball valves shall be subject to pressure test under low temperature after under normal temperature, with its principle is shown at the diaphram of cryogenic ball valves.

Main Parts and Materials

Part Name	Material
Body	Cast steel ,Cast stainless steel
Bonnet	Cast steel ,Cast stainless steel
Stem	Martensitic stainless steel ,Austenitic stainless steel
Ball	Martensitic stainless steel ,Austenitic stainless steel
Seal ring	Reintorced PTFE ,Carbon tibre ,PEEK

Pressure Test of Ball Valve Under Cryogenic

According to the requiements of certain standards, the test of cryogenic ball valves shall be carried out under both normal and cryogenic. With its principle as following:

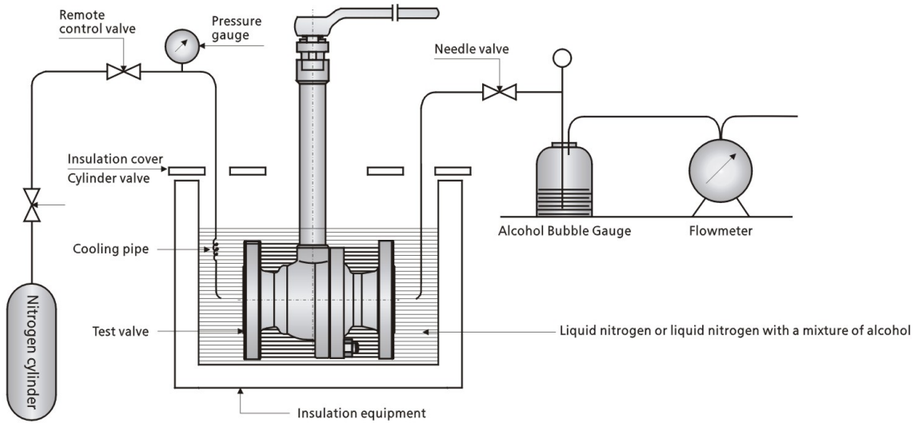

Cryogenic test device type

Purpose

Cryogenic ball valves are mainly used in the chemical equipment to handle cryogenic liquid medium like ethylene, liquid oxygen, liquid hydrogen and so on. These inflammable and explosive medium can be volumetrically expanded by several hundred times when being gasified. So the cryogenic ball valves are difficult to manufacture due to the high permeability and easy leakage of the medium.

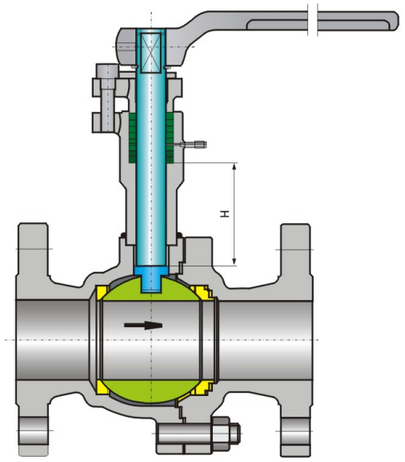

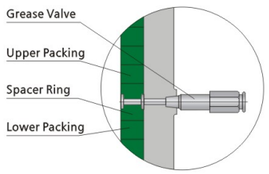

Double packing combination chart

Dimensions of The Bonnet and Extended Stem of The Cryogenic Ball Valve(for Reference)

Nominal Size		Neck Dimension (mm)			Nominal Size		Pressure
DN	NPS	≥-60℃	≥-100℃	<-100℃	DN	in	PN1.6-10.0MPa 150Lb、300Lb
15	1/2	90	110	130	15	1/2	△/●
20	3/4	100	110	140	20	3/4	△/●
25	1	100	120	150	25	1	△/●
32	1 1/4	110	120	150	32	1 1/4	△/●
40	1 1/2	110	130	160	40	1 1/2	△/●
50	2	110	130	170	50	2	△/★/●
65	1 1/2	120	140	180	65	1 1/2	△/★/●
80	3	120	150	190	80	3	△/★/●
100	4	130	160	200	100	4	△/★/●
125	5	130	160	200	125	5	△/★/●
150	6	140	170	220	150	6	△/★/●
200	8	140	170	220	200	8	△/★/●
250	10	150	180	240	250	10	△/★/●
300	12	150	180	240	300	12	△/★/●
350	14	160	190	250	350	14	△/★/●
400	16	160	190	250	400	16	△/★/●

Note: ★Stands for electrical operated valves; △Stands for pneumatic operated valves;
●Stands for lever operated valves;
Those not covered in the table can be made according to users' requirements.

Main External Dimensions

The main overall connection dimensions of low temperature ball valve may be referred to side-mounted floating ball valve and trunnion ball valve, with the height of valve being the height of the long neck added to that basis, so dimensions list is omitted here.

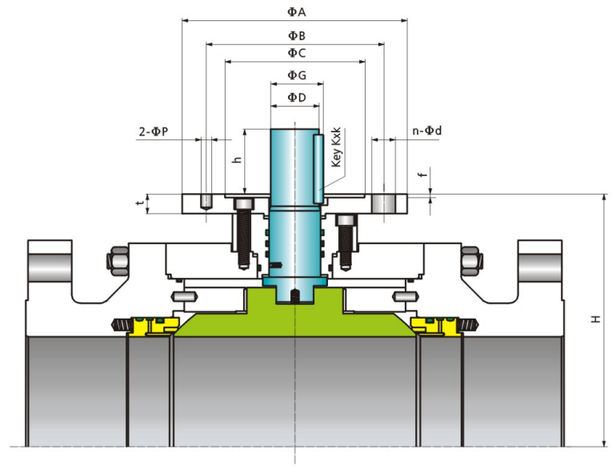

Dimensions Data

Size inch	Class	Torque N.m	Flange Dimensions(mm)							ISO5211 Flange No.	KeySize KxK mm	G mm	D mm	h mm	H mm
			A	B	C	f	t	n-d	P						
2*1-1/2	150	42	90	70	55	3	12	4-9	6	F07	6×6	25	22	25	95
	300	66	90	70	55	3	12	4-9	6	F07	6×6	25	22	25	95
	600	102	90	70	55	3	12	4-9	6	F07	6×6	25	22	25	95
	900	142	90	70	55	3	12	4-9	6	F07	6×6	25	22	25	100
	1500	241	90	70	55	3	15	4-9	6	F07	6×6	25	22	25	100
	2500	423	125	102	70	3	15	4-11	8	F10	8×8	32	28	30	115
2	150	76	90	70	55	3	12	4-9	6	F07	6×6	25	22	25	103
	300	91	90	70	55	3	12	4-9	6	F07	6×6	25	22	25	103
	600	143	90	70	55	3	12	4-9	6	F07	6×6	25	22	25	102
	900	231	125	102	70	3	17	4-11	8	F10	8×8	32	28	30	117
	1500	349	125	102	70	3	17	4-11	8	F10	8×8	32	28	30	117
	2500	798	150	125	85	3	20	4-13	10	F12	10×10	41	36	55	141
3	150	121	125	102	70	3	15	4-11	8	F10	8×8	32	28	30	129
	300	159	125	102	70	3	15	4-11	8	F10	8×8	32	28	30	129
	600	269	125	102	70	3	15	4-11	8	F10	8×8	32	28	30	132
	900	524	150	125	85	3	18	4-13	10	F12	10×10	41	36	55	140
	1500	887	150	125	85	3	18	4-13	10	F12	10×10	41	36	55	153
	2500	1583	175	140	100	3	24	4-18	10	F14	12×12	51	45	65	169
4	150	179	125	102	70	3	15	4-11	8	F10	8×8	32	28	30	150
	300	355	125	102	70	3	15	4-11	8	F10	8×8	32	28	30	150
	600	670	150	125	85	3	18	4-13	10	F12	10×10	41	36	55	160
	900	875	175	140	100	4	20	4-18	10	F14	12×12	51	45	65	172
	1500	1351	210	165	130	5	24	4-22	12	F16	14×14	57	50	75	193
	2500	2111	210	165	130	5	26	4-22	12	F16	14×14	62	55	80	205

Dimensions Data

Size inch	Class	Torque N.m	Flange Dimensions(mm) A	B	C	f	t	n-d	P	ISO5211 Flange No.	KeySize KxK mm	G mm	D mm	h mm	H mm
6	150	631	150	125	85	3	18	4-13	10	F12	10×10	41	36	55	188
	300	854	150	125	85	3	18	4-13	10	F12	10×10	41	36	55	188
	600	1609	175	140	100	4	20	4-18	10	F14	12×12	51	45	65	208
	900	1927	210	165	130	5	22	4-22	12	F16	13×13	62	55	80	215
	1500	3512	210	165	130	5	24	4-22	14	F16	16×16	68	60	90	235
	2500	5454	300	254	200	5	28	8-18	16	F25	16×16	73	65	85	270
8	150	987	210	165	130	5	20	4-22	10	F16	12×12	51	45	60	233
	300	1562	210	165	130	5	20	4-22	10	F16	12×12	51	45	60	233
	600	2501	210	165	130	5	22	4-22	12	F16	14×14	62	55	80	249
	900	4012	210	165	130	5	22	4-22	14	F16	16×16	38	60	90	266
	1500	6513	300	254	200	5	28	8-18	16	F25	18×18	79	70	105	285
	2500	8495	300	254	200	5	32	8-18	16	F25	18×18	84	75	110	355
10	150	1321	210	165	130	5	20	4-22	12	F16	14×14	62	55	80	278
	300	2304	210	165	130	5	20	4-22	12	F16	14×14	62	55	80	278
	600	3450	210	165	130	5	24	4-22	14	F16	16×16	68	60	90	300
	900	5017	300	254	200	5	25	8-18	16	F25	18×18	79	70	105	315
	1500	7996	300	254	200	5	28	8-18	16	F25	18×18	84	75	110	345
	2500	13148	300	254	200	5	32	8-18	16	F25	20×20	95	85	125	412
12	150	1650	210	165	130	5	24	4-22	14	F16	16×16	68	60	90	318
	300	3041	210	165	130	5	24	4-22	14	F16	16×16	68	60	90	320
	600	4507	300	254	200	5	25	8-18	16	F25	18×18	79	70	105	345
	900	6512	300	254	200	5	28	8-18	16	F25	18×18	84	75	110	360
	1500	10078	300	254	200	5	30	8-18	16	F25	20×20	95	85	125	408
	2500	18007	350	298	260	5	38	8-22	20	F30	24×24	107	95	140	478
14	150	2415	300	254	200	5	26	8-18	16	F25	16×16	73	65	95	353
	300	4019	300	254	200	5	26	8-18	16	F25	16×16	73	65	95	360
	600	6578	300	254	200	5	28	8-18	16	F25	18×18	84	75	110	376
	900	9489	300	254	200	5	28	8-18	16	F25	20×20	95	85	125	388
	1500	14860	300	254	200	5	35	8-18	16	F25	24×24	107	95	140	448
16	150	3314	300	254	200	5	28	8-18	16	F25	18×18	84	75	110	393
	300	5350	300	254	200	5	28	8-18	16	F25	18×18	84	75	110	406
	600	9025	300	254	200	5	28	8-18	16	F25	20×20	95	85	125	414
	900	12877	300	254	200	5	30	8-18	16	F25	24×24	107	95	140	442
	1500	21857	350	298	230	5	35	8-22	20	F30	28×28	119	105	155	490
18	150	5148	300	254	200	5	28	8-18	16	F25	18×18	84	75	110	435
	300	8375	300	254	200	5	28	8-18	16	F25	20×20	95	85	125	448
	600	13493	300	254	200	5	30	8-18	16	F25	24×24	107	95	140	458
	900	18975	350	298	230	5	32	8-22	20	F30	28×28	119	105	165	487
	1500	29032	350	298	230	5	38	8-22	20	F30	32×32	136	120	180	545
20	150	6425	300	254	200	5	30	8-18	16	F25	20×20	90	80	120	477
	300	10987	300	254	200	5	30	8-18	16	F25	24×24	107	95	140	485
	600	18502	350	298	230	5	32	8-22	20	F30	28×28	119	105	165	510
	900	26048	350	298	230	5	38	8-22	20	F30	32×32	136	120	180	530
	1500	40907	415	356	260	5	42	8-33	28	F35	36×36	158	140	210	580
24	150	12379	300	254	200	5	32	8-18	16	F25	24×24	102	90	135	562
	300	19384	350	298	230	5	32	8-22	20	F30	28×28	124	110	165	565
	600	29546	350	298	230	5	38	8-22	20	F30	32×32	136	120	180	602
	900	42379	415	356	260	5	42	8-33	28	F35	36×36	158	140	210	630
	1500	65223	475	406	300	8	48	8-39	28	F40	40×40	180	160	240	730

Notes:

1.The above table is suitable for TF,TW & TT series valves, which are with ISO 5211 mounting flange and adaptable to all types of actuators mounted.
2.The torque ia applied to valves with PTFE or Nylon seat as per different size/class election.
3.The torque value showed in above is at normal temperature.
a.If the temperature range of medium is -10℃ - 40℃，output torque of actuator should be 1.5 times the valve'.
b.If the temperature range of medium is -10℃, output torque of actuator should be 2 or 2.5 times the valve'.

Specification for Seat Materials

	PTFE	RPTFE	Molon(Nylon+MoS2)	PEEK
Tensile Strength(MPa)	24.8	25.4	75~100	91
Compressive Strength(MPa)	35	52	100~140	137
Elongation(%)	250	120	10~30	50
Hardness(SH.A)	56	60	78	82
Water Absorption	<0.01	<0.01	0.7	0.12
Specific Gravity	2.2	2.2	1.2	1.35
Temperature Range(℉)	-300~400	-150~425	-40~300	-150~500
Pressure Rating(Class)	150~600	150~600	150~1500	150~1500
Service Application	Chemical & Cryogenic	Chemical & Cryogenic	High Pressure & Low Temperature	High Pressure & Low Temperature
	Nylon1010	**Nylon12**	**Devlon**	**Delrin**
Tensile Strength(MPa)	55	60	80	68
Compressive Strength(MPa)	70	79	140	110
Elongation(%)	150	200	5.37	220
Hardness(SH.A)	90	75	78	78
Water Absorption	0.3	0.2	0.1	0.2
Specific Gravity	1.01	1.01	1.14	1.41
Temperature Range(℉)	-40~200	-58~250	-150~300	-58~230
Pressure Rating(Class)	600~1500	600~1500	150~1500	150~1500
Service Application	High Pressure & Low Temperature	High Pressure & Low Temperature	High Pressure & Low Temperature	High Pressure & Low Temperature

Specification for Seat Materials

	VitonA	NBR	VitonB	NBR(HSN)	Viton(AED)
Temperature Range(℉)	-20~400	-20~400	-20~400	-40~320	-20~480
Hardness(SH.A)	70	70	70	80	90
Specific Gravity(G/cm3)	1.85	1.85	1.85	1.33	1.9
Service Application	Petroleum Oil, Gasoline, Transmission Fluid	Petroleum Oil, Water, Hydraulic Oil	Mineral Acid, Steam, MTBE	Petroleum Oil, H2S & CO2, Anti-explosive Decompression	Petroleum Oil, H2S & CO2, Anti-explosive Decompression

Specification for Seat Materials

	Flexible Graphite	Spiral Wound 316+Graphite	PTFE	Spiral Wound Monel+PTFE
Temperature Range(℉)	-300~900	-300~900	-300~400	-300~400
PH	0~14	0~14	0~14	0~14
Service Application	Fire Safe	Fire Safe	Cryogenic, High Corrosive	High Corrosive

*Due to quick development, we reserve the right to institute changes in material, design and specifications for all FBIC designed valves without prior notice

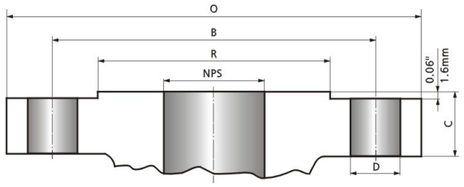

ANSI Class 150LB/300LB
0.06"(1.6mm) Raised Face Joint

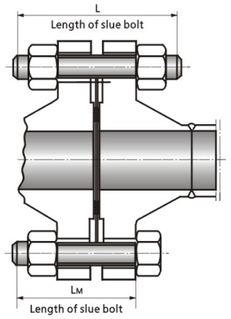

Class 150LB

NPS		O		C		R		B		D		Bolt		L		LM	
in	mm	in	mm	in	mm	in	mm	in	mm	in	mm	QTY	Diam	in	mm	in	mm
2	50	6.00	152.4	0.75	19.1	3.62	91.9	4.75	120.7	0.75	19.1	4	5/8	3.25	82.6	2.75	69.9
2 1/2	65	7.00	177.8	0.88	22.4	4.12	104.6	5.50	139.7	0.75	19.1	4	5/8	3.50	88.9	3.00	76.2
3	80	7.50	190.5	0.94	23.9	5.00	127.0	6.00	152.4	0.75	19.1	4	5/8	3.50	88.9	3.00	76.2
4	100	9.00	228.6	0.94	23.9	6.19	157.2	7.50	190.5	0.75	19.1	8	5/8	3.50	88.9	3.00	76.2
5	125	10.00	254.0	0.94	23.9	7.31	185.7	8.50	215.9	0.88	22.4	8	3/4	3.75	95.3	3.25	82.6
6	150	11.00	279.4	1.00	25.4	8.50	215.9	9.50	241.3	0.88	22.4	8	3/4	4.00	101.6	3.25	82.6
8	200	13.50	342.9	1.12	28.4	10.62	269.7	11.75	298.5	0.88	22.4	8	3/4	4.25	108.0	3.50	88.9
10	250	16.00	406.4	1.19	30.2	12.75	323.9	14.25	362.0	1.00	25.4	12	7/8	4.50	114.3	4.00	101.6
12	300	19.00	482.6	1.25	31.8	15.00	381.0	17.00	431.8	1.00	25.4	12	7/8	4.75	120.7	4.00	101.6
14	350	21.00	533.4	1.38	35.1	16.25	412.8	18.75	476.3	1.12	28.4	12	1	5.25	133.4	4.50	114.3
16	400	23.50	596.9	1.44	36.6	18.50	469.9	21.25	539.8	1.12	28.4	16	1	5.25	133.4	4.50	114.3
18	450	25.00	635.0	1.56	39.6	21.00	533.4	22.75	577.9	1.25	31.8	16	1 1/8	5.75	146.1	5.00	127.0
20	500	27.50	698.5	1.69	42.9	23.00	584.2	25.00	635.0	1.25	31.8	20	1 1/8	6.25	158.8	5.50	139.7
24	600	32.00	812.8	1.88	47.8	27.25	692.2	29.50	749.3	1.38	35.1	20	1 1/4	6.75	171.5	6.00	152.4
26	650	34.25	870.0	2.69	68.3	29.50	749.3	31.75	806.5	1.38	35.1	24	1 1/4	8.25	209.6	7.50	190.5
28	700	36.50	927.1	2.81	71.4	31.50	800.1	34.00	863.6	1.38	35.1	28	1 1/4	8.50	215.9	7.75	196.9
30	750	38.75	984.3	2.94	74.7	33.75	857.3	36.00	914.4	1.38	35.1	28	1 1/4	9.00	228.6	8.00	203.2
32	800	41.75	1060.5	3.18	80.8	36.00	914.4	38.50	977.9	1.62	41.1	28	1 1/2	9.75	247.7	8.75	222.3
34	850	43.75	111.3	3.25	82.6	38.00	965.2	40.50	1028.7	1.62	41.1	32	1 1/2	10.00	254.0	9.00	228.6
36	900	46.00	1168.4	3.56	90.4	40.25	1022.4	42.75	1085.9	1.62	41.1	32	1 1/2	10.50	266.7	9.50	241.3

Class 300LB

NPS		O		C		R		B		D		Bolt		L		LRTJ		LM	
in	mm	in	mm	in	mm	in	mm	in	mm	in	mm	QTY	Diam	in	mm	in	mm	in	mm
2	50	6.50	165.1	0.88	22.4	3.62	91.9	5.00	127.0	0.75	19.1	8	5/8	3.50	88.9	4.00	101.6	3.00	76.2
2 1/2	65	7.50	190.5	1.00	25.4	4.13	104.6	5.88	149.4	0.88	22.4	8	3/4	4.00	101.6	4.50	114.3	3.25	82.6
3	80	8.25	209.6	1.12	28.4	5.00	127.0	6.62	168.1	0.88	22.4	8	3/4	4.25	108.0	4.75	120.7	3.50	88.9
4	100	10.00	254.0	1.25	31.8	6.19	157.2	7.88	200.2	0.88	22.4	8	3/4	4.50	114.3	5.00	127.0	3.75	95.3
5	125	11.00	279.4	1.38	35.1	9.31	185.7	9.25	235.0	0.88	22.4	8	3/4	4.75	120.7	5.25	133.4	4.25	108.0
6	150	12.50	317.5	1.44	36.6	8.50	215.9	10.62	269.7	0.88	22.4	12	3/4	4.75	120.7	5.50	139.7	4.25	108.0
8	200	15.00	381.0	1.62	41.1	10.62	269.7	13.00	330.2	1.00	25.4	12	7/8	5.50	139.7	6.00	152.4	4.75	120.7
10	250	17.50	444.5	1.88	47.8	12.75	323.9	15.25	387.4	1.12	28.4	16	1	6.25	158.8	6.75	171.5	5.50	139.7
12	300	20.50	520.7	2.00	50.8	15.00	381.0	17.75	450.9	1.25	31.8	16	1 1/8	6.75	171.5	7.25	184.2	5.75	146.1
14	350	23.00	584.2	2.12	53.8	16.25	412.8	20.25	514.4	1.25	31.8	20	1 1/8	7.00	177.8	7.50	190.5	6.25	158.8
16	400	25.50	647.7	2.25	57.2	18.50	469.9	22.50	571.5	1.38	35.1	20	1 1/4	7.50	190.5	8.00	203.2	6.50	165.1
18	450	28.00	711.2	2.38	60.5	21.00	533.4	24.75	628.7	1.38	35.1	24	1 1/4	7.75	196.9	8.25	209.6	6.75	171.5
20	500	30.50	774.7	2.50	63.5	23.00	584.2	27.00	685.8	1.38	35.1	24	1 1/4	8.00	203.2	8.75	222.3	7.25	184.2
24	600	36.00	914.4	2.75	69.9	27.25	692.2	32.00	812.8	1.62	41.1	24	1 1/2	9.00	228.6	10.00	254.0	8.00	203.2
26	650	38.25	971.6	3.12	79.2	29.50	749.3	34.50	876.3	1.75	44.5	28	1 5/8	10.25	260.4	11.25	285.8	9.25	235.0
28	700	40.75	1035.1	3.38	85.9	31.50	800.1	37.00	939.8	1.75	44.5	28	1 5/8	10.75	273.1	11.75	298.5	9.75	247.7
30	750	43.00	1092.2	3.62	91.9	33.75	857.3	39.25	997.0	1.88	47.8	28	1 3/4	11.50	292.1	12.50	317.5	10.50	266.7
32	800	45.25	1149.4	3.88	98.6	36.00	914.4	41.50	1054.1	2.00	50.8	28	1 7/8	12.25	311.2	13.50	342.9	11.25	285.8
34	850	47.50	1206.5	4.00	101.6	38.00	965.2	43.50	1104.9	2.00	50.8	28	1 7/8	12.75	323.9	13.75	349.3	11.75	298.5
36	900	50.00	1270.0	4.12	104.6	40.25	1022.4	46.00	1168.4	2.12	53.8	32	2	13.25	336.6	14.25	362.0	12.25	311.2

a) NPS 24" and smaller flanged ends designed by ANSI B16.5, NPS 26" and larger designed by MSS SP-44.
b) Flanged of 150Lb and 300Lb with the raised face of 0.06(1.6mm)is included in the smallest flange of thickness C.
c) The length L of the double-end bolt doesn't include the terminal length.
d) Flange gasket of the matching flange ASME B16.20.

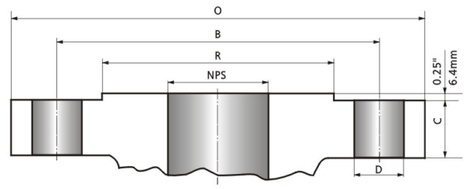

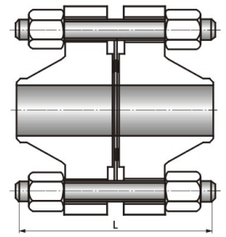

ANSI Class 600LB/900LB
0.25"(6.4mm) Raised Face Joint

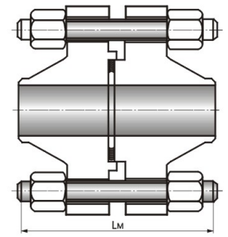

ANSI Class 600LB/900LB
Male & Female

Class 600LB

NPS		O		C		R		B		D		Bolt		L		LRTJ		LM	
in	mm	in	mm	in	mm	in	mm	in	mm	in	mm	QTY	Diam	in	mm	in	mm	in	mm
2	50	6.50	165.1	1.00	25.4	3.62	91.9	5.00	127.0	0.75	19.1	8	5/8	4.25	108.0	4.25	108.0	4.00	101.6
2 1/2	65	7.50	190.5	1.12	28.4	4.12	104.6	5.88	149.4	0.88	22.4	8	3/4	4.75	120.7	4.75	120.7	4.50	114.3
3	80	8.25	209.6	1.25	31.8	5.00	127.0	6.62	168.1	0.88	22.4	8	3/4	5.00	127.0	5.00	127.0	4.75	120.7
4	100	10.75	273.1	1.50	38.1	6.19	157.2	8.50	215.9	1.00	25.4	8	7/8	5.75	146.1	5.75	146.1	5.50	139.7
5	125	13.00	330.2	1.75	44.5	7.31	185.7	10.50	266.7	1.12	28.4	8	1	6.50	165.1	6.50	165.1	6.25	158.8
6	150	14.00	355.6	1.88	47.8	8.50	215.9	11.50	292.1	1.12	28.4	12	1	6.75	171.5	6.75	171.5	6.50	165.1
8	200	16.50	419.1	2.19	55.6	10.62	269.7	13.75	349.3	1.25	31.8	12	1 1/8	7.50	190.5	7.50	190.5	7.25	184.2
10	250	20.00	508.0	2.50	63.5	12.75	323.9	17.00	431.8	1.38	35.1	16	1 1/4	8.50	215.9	8.50	215.9	8.25	209.6
12	300	22.00	558.8	2.62	66.5	15.00	381.0	19.25	489.0	1.38	35.1	20	1 1/4	8.75	222.3	8.75	222.3	8.50	215.9
14	350	23.75	603.3	2.75	69.9	16.25	412.8	20.75	527.1	1.50	38.1	20	1 3/8	9.25	235.0	9.25	235.0	9.00	228.6
16	400	27.00	685.8	3.00	76.2	18.50	469.9	23.75	603.3	1.62	41.1	20	1 1/2	10.00	254.0	10.00	254.0	9.75	247.7
18	450	29.25	743.0	3.25	82.6	21.00	533.4	25.75	654.1	1.75	44.5	20	1 5/8	10.75	273.1	10.75	273.1	10.50	266.7
20	500	32.00	812.8	3.50	88.9	23.00	584.2	28.50	723.9	1.75	44.5	24	1 5/8	11.25	285.8	11.50	292.1	11.00	279.4
24	600	37.00	939.8	4.00	101.6	27.25	692.2	33.00	838.2	2.00	50.8	24	1 7/8	13.00	330.2	13.25	336.6	12.75	323.9
26	650	40.00	1016.0	4.25	108.0	29.50	749.3	36.00	914.4	2.00	50.8	28	1 7/8	14.00	355.6	14.00	355.6	13.75	349.3
28	700	42.25	1073.2	4.38	111.3	31.50	800.1	38.00	965.2	2.12	53.8	28	2	14.50	368.3	14.50	368.3	14.25	362.0
30	750	44.50	1130.3	4.50	114.3	33.75	857.3	40.25	1022.4	2.12	53.8	28	2	15.00	381.0	14.75	374.7	14.75	374.7
32	800	47.00	1193.8	4.62	117.3	36.00	914.4	42.50	1079.5	2.38	60.5	28	2 1/4	15.50	393.7	15.75	400.1	15.25	387.4
34	850	49.00	1244.6	4.75	120.7	38.00	965.2	44.50	1130.3	2.38	60.5	28	2 1/4	16.25	412.8	16.25	412.8	16.00	406.4
36	900	51.75	1314.5	4.88	124.0	40.25	1022.4	47.00	1193.8	2.62	66.5	28	2 1/2	15.75	400.1	16.75	425.5	15.50	393.7

Class 900LB

NPS		O		C		R		B		D		Bolt		L		LRTJ		LM	
in	mm	in	mm	in	mm	in	mm	in	mm	in	mm	QTY	Diam	in	mm	in	mm	in	mm
2	50	8.50	215.9	1.50	38.1	3.62	91.9	6.50	165.1	1.00	25.4	8	7/8	5.75	146.1	5.75	146.1	5.50	139.7
2 1/2	65	9.62	244.3	1.62	41.1	4.12	104.6	7.50	190.5	1.12	28.4	8	1	6.25	158.8	6.25	158.8	6.00	152.4
3	80	9.50	241.3	1.50	38.1	5.00	127.0	7.50	190.5	1.00	25.4	8	7/8	5.75	146.1	5.75	146.1	5.50	139.7
4	100	11.50	292.1	1.75	44.5	6.19	157.2	9.25	235.0	1.25	31.8	8	1 1/8	6.75	171.5	6.75	171.5	6.50	165.1
5	125	13.75	349.3	2.00	50.8	7.31	185.7	11.00	279.4	1.38	35.1	8	1 1/4	7.50	190.5	7.50	190.5	7.25	184.2
6	150	15.00	381.0	2.19	55.6	8.50	215.9	12.50	317.5	1.25	31.8	12	1 1/8	7.50	190.5	7.75	196.9	7.25	184.2
8	200	18.50	469.9	2.50	63.5	10.62	269.7	15.50	393.7	1.50	38.1	12	1 3/8	8.75	222.3	8.75	222.3	8.50	215.9
10	250	21.50	546.1	2.75	69.9	12.75	323.9	18.50	469.9	1.50	38.1	16	1 3/8	9.25	235.0	9.25	235.0	9.00	228.6
12	300	24.00	609.6	3.12	79.2	15.00	381.0	21.00	533.4	1.50	38.1	20	1 3/8	10.00	254.0	10.00	254.0	9.75	247.7
14	350	25.25	641.4	3.38	85.9	16.25	412.8	22.00	558.8	1.62	41.1	20	1 1/2	10.75	273.1	11.00	279.4	10.50	266.7
16	400	27.75	704.9	3.50	88.9	18.50	469.9	24.25	616.0	1.75	44.5	20	1 5/8	11.25	285.8	11.50	292.1	11.00	279.4
18	450	31.00	787.4	4.00	101.6	21.00	533.4	27.00	685.8	2.00	50.8	20	1 7/8	12.75	323.9	13.25	336.6	12.50	317.5
20	500	33.75	857.3	4.25	108.0	23.00	584.2	29.50	749.3	2.12	53.8	20	2	13.75	349.3	14.25	362.0	13.50	342.9
24	600	41.00	1041.4	5.50	139.7	27.25	692.2	35.50	901.7	2.62	66.5	20	2 1/2	17.25	438.2	18.00	457.2	17.00	431.8

a) NPS 24" and smaller flanged ends designed by ANSI B16.5, NPS 26" and larger designed by MSS SP-44.
b) Flanged of 600Lb and 900Lb with the raised face of 0.25(6.4mm)is added while excluded by the smallest flange of thickness C.
c) The length L/LM of the double-end bolt doesn't include the terminal length.
d) Flange gasket of the matching flange ASME B16.20.

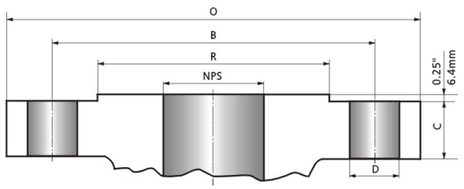

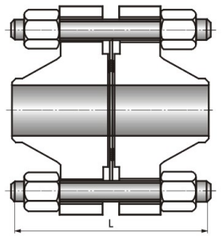

ANSI Class 600LB/900LB
0.25"(6.4mm) Raised Face Joint

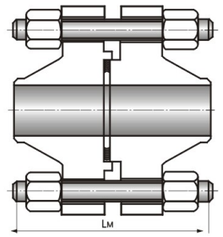

ANSI Class 1500LB/2500LB
Male & Female

Class 1500LB

NPS		O		C		R		B		D		Bolt		L		LRTJ		LM	
in	mm	in	mm	in	mm	in	mm	in	mm	in	mm	QTY	Diam	in	mm	in	mm	in	mm
2	50	8.50	215.9	1.50	38.1	3.62	91.9	6.50	165.1	1.00	25.4	8	7/8	5.75	146.1	5.75	146.1	5.50	139.7
2 1/2	65	9.62	244.3	1.62	41.1	4.12	104.6	7.50	190.5	1.12	28.4	8	1	6.25	158.8	6.25	158.8	6.00	152.4
3	80	10.50	266.7	1.88	47.8	5.00	127.0	8.00	203.2	1.25	31.8	8	1 1/8	7.00	177.8	7.00	177.8	6.75	171.5
4	100	12.25	311.2	2.12	53.8	6.19	157.2	9.50	241.3	1.38	35.1	8	1 1/4	7.75	196.9	7.75	196.9	7.50	190.5
5	125	14.75	374.7	2.88	73.2	7.31	185.7	11.50	292.1	1.62	41.1	8	1 1/2	9.75	247.7	9.75	247.7	9.50	241.3
6	150	15.50	393.7	3.25	82.6	8.50	215.9	12.50	317.5	1.50	38.1	12	1 3/8	10.25	260.4	10.50	266.7	10.00	254.0
8	200	19.00	482.6	3.62	91.9	10.62	269.7	15.50	393.7	1.75	44.5	12	1 5/8	11.50	292.1	12.75	323.9	11.25	285.8
10	250	23.00	584.2	4.25	108.0	12.75	323.9	19.00	482.6	2.00	50.8	12	1 7/8	13.25	336.6	13.50	342.9	13.00	330.2
12	300	26.50	673.1	4.88	124.0	15.00	381.0	22.50	571.5	2.12	53.8	16	2	14.75	374.7	15.25	387.4	14.50	368.3
14	350	29.50	749.3	5.25	133.4	16.25	412.8	25.00	635.0	2.38	60.5	16	2 1/4	16.00	406.4	16.75	425.5	15.75	400.1
16	400	32.50	825.5	5.75	146.1	18.50	469.9	27.75	704.9	2.62	66.5	16	2 1/2	17.50	444.5	18.50	469.9	17.25	438.2
18	450	36.00	914.4	6.38	162.1	21.00	533.4	30.50	774.7	2.88	73.2	16	2 3/4	19.50	495.3	20.75	527.1	19.25	489.0
20	500	38.75	984.3	7.00	177.8	23.00	584.2	32.75	831.9	3.12	79.2	16	3	21.25	539.8	22.25	565.2	21.00	533.4
24	600	46.00	1168.4	8.00	203.2	27.25	692.2	39.00	990.6	3.62	91.9	16	3 1/2	24.25	616.0	25.50	647.7	24.00	609.6

Class 2500LB

NPS		O		C		R		B		D		Bolt		L		LRTJ		LM	
in	mm	in	mm	in	mm	in	mm	in	mm	in	mm	QTY	Diam	in	mm	in	mm	in	mm
2	50	9.25	235.0	2.00	50.8	3.62	91.9	6.75	171.5	1.12	28.4	8	1	7.00	177.8	7.00	177.8	6.75	171.5
2 1/2	65	10.50	266.7	2.25	57.2	4.12	104.6	7.75	196.9	1.25	31.8	8	1 1/8	7.75	196.9	8.00	203.2	7.50	190.5
3	80	12.00	304.8	2.62	66.5	5.00	127.0	9.00	228.6	1.38	35.1	8	1 1/4	8.75	222.3	9.00	228.6	8.50	215.9
4	100	14.00	355.6	3.00	76.2	6.19	157.2	10.75	273.1	1.62	41.1	8	1 1/2	10.00	254.0	10.25	260.4	9.75	247.7
5	125	16.50	419.1	3.62	91.9	7.31	185.7	12.75	323.9	1.88	47.8	8	1 3/4	11.75	298.5	12.25	311.2	11.50	292.1
6	150	19.00	482.6	4.25	108.0	8.50	215.9	14.50	368.3	2.12	53.8	8	2	13.50	342.9	14.00	355.6	13.25	336.6
8	200	21.75	552.5	5.00	127.0	10.62	269.7	17.25	438.2	2.12	53.8	12	2	15.00	381.0	15.50	393.7	14.75	374.7
10	250	26.50	673.1	6.50	165.1	12.75	323.9	21.25	539.8	2.62	66.8	12	2 1/2	19.25	489.0	20.00	508.0	19.00	482.6
12	300	30.00	762.0	7.25	184.2	15.00	381.0	24.38	619.3	2.88	73.2	12	2 3/4	21.25	539.8	22.00	558.8	21.00	533.4

a) NPS 24" and smaller flanged ends designed by ANSI B16.5.
b) Flanged of 1500Lb and 2500Lb with the raised face of 0.25(6.4mm)is added while excluded by the smallest flange of thickness C.
c) The length L/LM of the double-end bolt doesn't include the terminal length.
d) Flange gasket of the matching flange ASME B16.20.

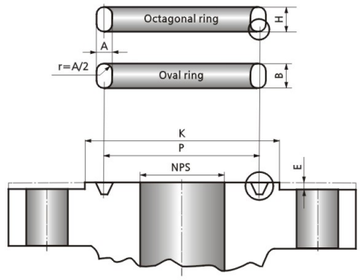

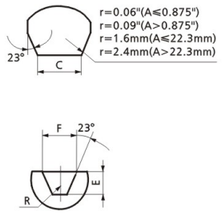

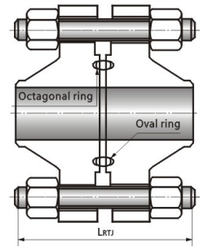

Ring-joint Flanged End

1	2	4	5	6	7	8	9		10		11		12		13		14		15		16		17	
ANSI Class-LB						Annular groove									150LB		300/600LB		900LB		1500LB		2500LB	
150	300	600	900	1500	2500	No.	P		E		F		R		K									
NPS							in	mm	in	mm	in	mm	in	mm	in	mm	in	mm	in	mm	in	mm	in	mm
2						R22	3.250	82.55	0.250	6.35	0.344	8.74	0.03	0.76	4.00	101.60								
	2	2				R23	3.250	85.55	0.312	7.92	0.469	11.91	0.03	0.76			4.25	107.95					4.50	114.30
				2		R24	3.750	95.25	0.312	7.92	0.469	11.91	0.03	0.76							4.88	123.95		
					2	R26	4.000	101.60	0.312	7.92	0.469	11.91	0.03	0.76			5.00	127.00					5.25	133.35
						R25	4.000	101.60	0.250	6.35	0.344	8.74	0.03	0.76	4.75	120.65								
2 1/2	2 1/2	2 1/2				R26	4.000	101.60	0.312	7.92	0.469	11.91	0.03	0.76			5.00	127.00					5.25	133.35
				2 1/2		R27	4.250	107.95	0.312	7.92	0.469	11.91	0.03	0.76							5.38	136.65		
					2 1/2	R28	4.375	111.13	0.375	9.53	0.531	13.49	0.03	0.76									5.88	149.35
3						R29	4.500	114.30	0.250	6.35	0.344	8.47	0.03	0.76	5.25	133.35								
	3	3	3			R31	4.875	123.83	0.312	7.92	0.469	11.91	0.03	0.76			5.75	146.05	6.12	155.45				
					3	R32	5.000	127.00	0.375	9.53	0.531	13.49	0.06	1.52									6.62	168.15
4						R36	5.875	149.23	0.250	6.35	0.344	8.74	0.03	0.76	6.75	171.45								
	4	4	4			R37	5.875	149.23	0.312	7.92	0.469	11.91	0.03	0.76			6.88	174.75	7.12	180.85				
					4	R38	6.188	157.18	0.438	11.13	0.656	16.66	0.06	1.52									8.00	203.20
				4		R39	6.375	161.93	0.312	7.92	0.469	11.91	0.03	0.76							7.62	193.55		
5						R40	6.750	171.45	0.50	6.35	0.344	8.74	0.03	0.76	7.62	193.55								
	5	5	5			R41	7.125	180.98	0.312	7.92	0.469	11.91	0.03	0.76			8.25	209.55	8.50	215.90				
					5	R42	7.500	190.50	0.500	12.70	0.781	19.84	0.060	1.52									9.50	241.30
				5		R44	7.625	193.68	0.312	7.92	0.469	11.91	0.03	0.76							9.00	228.60		
6						R43	7.625	193.68	0.250	6.35	0.344	8.74	0.03	0.76	8.62	218.95								
	6	6	6			R45	8.312	211.12	0.312	7.92	0.469	11.91	0.03	0.76			9.50	241.30	9.50	241.30				
				6		R46	8.312	211.12	0.375	9.53	0.531	13.49	0.06	1.52							9.75	247.65		
					6	R47	9.000	228.60	0.500	12.70	0.781	19.84	0.06	1.52									11.00	279.40
8						R48	9.750	247.65	0.250	6.35	0.344	8.74	0.03	0.76	10.75	273.05								
	8	8	8			R49	10.625	269.88	0.312	7.92	0.469	11.91	0.03	0.76			11.88	301.75	12.12	307.85				
				8		R50	10.625	269.88	0.438	11.13	0.656	16.66	0.06	1.52							12.50			
					8	R51	11.000	279.40	0.562	14.27	0.906	23.01	0.06	1.52									13.38	339.85

a) Please to see flange ends for other connection dimension.
b) Flange metal ring gasket of the matching flange ASME B16.20.
c) For the specification of NPS 2~2 1/2" of 900Lb will adopt the dimension of 1500Lb.
d) The length LRTJ of the double-end bolt doesn't include the terminal length.

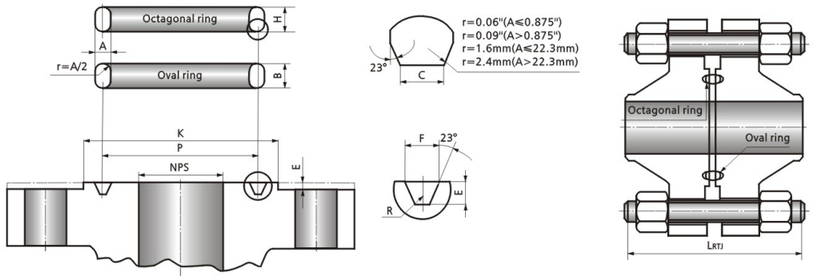

Ring-joint Flanged End

1	2	4	5	6	7	8	9		10		11		12		13		14		15		16		17	
ANSI Class-LB						Annular groove									150LB		300/600LB		900LB		1500LB		2500LB	
150	300	600	900	1500	2500	No.	P		E		F		R		K									
NPS							in	mm	in	mm	in	mm	in	mm	in	mm	in	mm	in	mm	in	mm	in	mm
10						R52	12.000	304.80	0.250	6.35	0.344	8.74	0.03	0.76	13.00	330.20								
	10	10	10			R53	12.750	323.85	0.312	7.92	0.469	11.91	0.03	0.76			14.00	355.60	14.25	361.95				
				10		R54	12.750	323.85	0.438	11.13	0.656	16.66	0.06	1.52							4.62	371.35		
					10	R55	13.500	342.90	0.688	17.48	1.188	30.18	0.09	2.29									16.75	425.45
12						R56	15.000	381.00	0.250	6.35	0.344	8.74	0.03	0.76	16.00	406.40								
	12	12	12			R57	15.000	381.00	0.312	7.92	0.469	11.91	0.03	0.76			16.25	412.75	16.50	419.10				
				12		R58	15.000	381.00	0.562	14.27	0.906	23.01	0.06	1.52							17.25	438.15		
					12	R60	16.000	406.40	0.688	17.48	1.312	33.32	0.09	2.29									19.50	495.30
14						R59	15.625	396.88	0.250	6.35	0.344	8.74	0.03	0.76	16.75	425.45								
	14	14				R61	16.500	419.10	0.312	7.92	0.469	11.91	0.03	0.76			18.00	457.20	18.38	466.85				
			14	14		R62	16.500	419.10	0.438	11.13	0.656	16.66	0.06	1.52							19.25	488.95		
						R63	16.500	419.10	0.625	15.88	1.062	26.97	0.09	2.29										
16						R64	17.875	454.03	0.250	6.35	0.344	8.74	0.03	0.76	19.00	482.60								
	16	16				R65	18.500	469.90	0.312	7.92	0.469	11.91	0.03	0.76			20.00	508.00						
			16			R66	18.500	469.90	0.438	11.13	0.656	16.66	0.06	1.52					20.62	523.75				
				16		R67	18.500	469.90	0.688	17.48	1.188	30.18	0.09	2.29							21.50	546.10		
18						R68	20.375	517.53	0.250	6.35	0.344	8.74	0.03	0.76	21.50	546.10								
	18	18				R69	21.000	533.40	0.312	7.92	0.469	11.91	0.03	0.76			22.62	574.55						
			18			R70	21.000	533.40	0.500	12.70	0.781	19.84	0.06	1.52					23.38	593.85				
				18		R71	21.000	533.40	0.688	17.48	1.188	30.18	0.09	2.29							24.12	612.65		
20						R72	22.000	558.80	0.250	6.35	0.344	8.74	0.03	0.76	23.50	596.90								
	20	20				R73	23.000	584.20	0.375	9.53	0.531	13.49	0.06	1.52			25.00	635.00						
			20			R74	23.000	584.20	0.500	12.70	0.781	19.84	0.06	1.52					25.50	647.70				
				20		R75	23.000	584.20	0.688	17.48	1.312	33.32	0.09	2.29							26.50	673.10		
24						R76	26.500	673.10	0.250	6.35	0.344	8.74	0.03	0.76	28.00	711.20								
	24	24				R77	27.250	692.15	0.438	11.13	0.656	16.66	0.06	1.52			29.50	749.30						
			24			R78	27.250	692.15	0.625	15.88	1.062	26.97	0.09	2.29					30.38	771.65				
				24		R79	27.250	692.15	0.812	20.62	1.438	36.53	0.09	2.29							31.25	793.75		

a) Please to see flange ends for other connection dimension.
b) Flange metal ring gasket of the matching flange ASME B16.20.
c) For the specification of NPS 2~2½" of 900Lb will adopt the dimension of 1500Lb.
d) The length LRTJ of the double-end bolt doesn't include the terminal length.

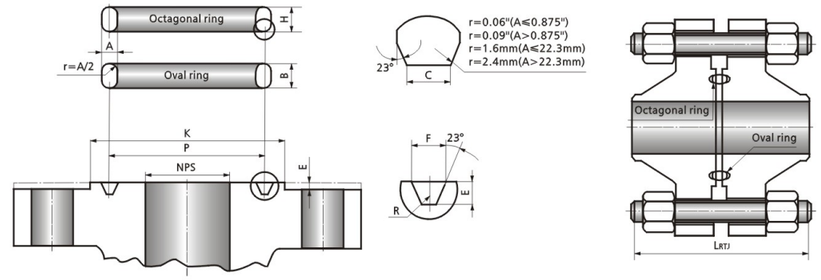

Ring-joint Flanged End

1	2	4	5	6	7	8	25		26		27		28		29		30		31		32		33		34	
ANSI Class-LB						Metal joint ring									150LB		300LB		600LB		900LB		1500LB		2500LB	
150	300	600	900	1500	2500	No.	A		B		H		C		K											
NPS							in	mm	in	mm	in	mm	in	mm	in	mm	in	mm	in	in	mm	mm	in	mm	in	mm
2						R22	0.313	7.95	0.56	14.22	0.50	12.70	0.206	5.23	3.75	95.25										
	2	2				R23	0.438	11.13	0.69	17.53	0.63	16.00	0.305	7.75			4.00	101.60	4.25	107.95						
				2		R24	0.438	11.13	0.69	17.53	0.63	16.00	0.305	7.75									5.75	146.05		
					2	R26	0.438	11.13	0.69	17.53	0.63	16.00	0.305	7.75											7.00	177.80
2½						R25	0.313	7.95	0.56	14.22	0.50	12.70	0.206	5.23	4.00	101.60										
	2½	2½				R26	0.438	11.13	0.69	17.53	0.63	16.00	0.305	7.75			4.50	114.30	4.75	120.65					7.00	177.80
						R27	0.438	11.13	0.69	17.53	0.63	16.00	0.305	7.75									6.25	158.75		
				2½	2½	R28	0.500	12.70	0.69	14.22	0.69	17.53	0.341	8.66											8.00	203.20
3						R29	0.313	7.95	0.69	17.53	0.50	12.70	0.206	5.23	4.00	101.60										
	3	3	3			R31	0.438	11.13	0.69	17.53	0.63	16.00	0.305	7.75			4.75	120.65	5.00	127.00	5.75	146.05				
					3	R32	0.500	12.70	0.75	19.05	0.69	17.53	0.341	8.66											9.00	228.60
				3		R35	0.438	11.13	0.69	17.53	0.63	16.0	0.305	7.75									7.00	177.80		
4						R36	0.313	7.95	0.56	14.22	0.50	12.70	0.206	5.23	4.00	101.60										
	4	4	4			R37	0.438	11.13	0.69	17.53	0.63	16.00	0.305	7.75			5.00	127.00	5.75	146.05	6.75	171.45				
					4	R38	0.625	15.88	0.88	22.35	0.81	20.57	0.413	10.49											10.25	260.35
				4		R39	0.438	11.13	0.69	17.53	0.63	16.00	0.305	7.75									7.75	196.85		
5						R40	0.313	7.95	0.56	14.22	0.50	12.70	0.206	5.23	4.25	107.95										
	5	5	5			R41	0.438	11.13	0.69	17.53	0.63	16.00	0.305	7.75			5.25	133.35	6.50	165.10	7.50	190.50				
					5	R42	0.750	19.05	1.00	25.40	0.94	23.88	0.485	12.32											12.25	311.15
				5		R44	0.438	11.13	0.69	17.53	0.63	16.00	0.305	7.75									9.75	247.65		
6						R43	0.313	7.95	0.56	14.22	0.50	12.70	0.206	5.23	4.50	114.30										
	6	6	6			R45	0.438	11.13	0.69	17.53	0.63	16.00	0.305	7.75			5.50	139.70	6.75	171.45	7.75	196.85				
				6		R46	0.500	12.70	0.75	19.05	0.69	17.53	0.341	8.66									10.50	266.70		
					6	R47	0.750	19.05	1.00	25.40	0.94	23.88	0.485	12.32											14.00	355.60
8						R48	0.313	7.95	0.56	14.22	0.50	12.70	0.206	5.23	4.75	120.65										
	8	8	8			R49	0.438	11.13	0.69	17.53	0.63	16.00	0.305	7.75			6.00	152.40	7.75	196.85	8.75	222.25				
				8		R50	0.625	15.88	0.88	22.35	0.81	20.57	0.413	10.49									12.75	323.85		
					8	R51	0.875	22.23	1.13	28.70	1.06	26.92	0.583	14.81											15.50	393.70

a) Please to see flange ends for other connection dimension.
b) Flange metal ring gasket of the matching flange ASME B16.20.
c) For the specification of NPS 2~2½" of 900Lb will adopt the dimension of 1500Lb.
d) The length LRTJ of the double-end bolt doesn't include the terminal length.

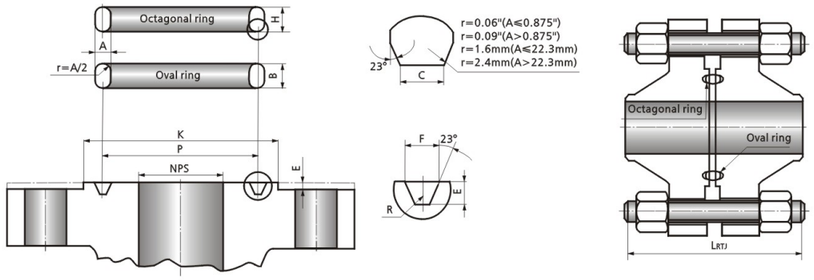

Ring-joint Flanged End

1	2	4	5	6	7	8	25		26		27		28		29		30		31		32		33		34	
ANSI Class-LB						Metal joint ring									150LB		300LB		600LB		900LB		1500LB		2500LB	
150	300	600	900	1500	2500	No.	A		B		H		C		K											
NPS							in	mm	in	mm	in	mm	in	mm	in	mm	in	mm	in	mm	in	mm	in	mm	in	mm
10						R52	0.313	7.95	0.56	14.22	0.50	12.70	0.206	5.23	5.00	127.00										
	10	10	10			R53	0.438	11.13	0.69	17.53	0.63	16.00	0.305	7.75			6.75	171.45	8.50	215.90	9.25	234.95				
				10		R54	0.625	15.88	0.88	22.35	0.81	20.57	0.413	10.49									13.50			
					10	R55	1.125	28.58	1.44	36.58	1.38	35.05	0.780	19.81											20.00	508.00
12						R56	0.313	7.95	0.56	14.22	0.50	12.70	0.206	5.23	5.25	133.35										
	12	12	12			R57	0.438	11.13	0.69	17.53	0.63	16.00	0.305	7.75			7.25	184.15	8.75	222.25	10.0	254.00				
				12		R58	0.875	22.23	1.13	28.70	1.06	26.92	0.583	14.81									15.25	387.35		
					12	R60	1.250	31.75	1.56	39.62	1.50	38.10	0.879	22.23											22.00	558.80
14						R59	0.313	7.95	0.56	14.22	0.50	12.70	0.206	5.23	5.75	146.05										
	14	14				R61	0.438	11.13	0.69	17.53	0.63	16.00	0.305	7.75			7.50	190.50	9.25	234.95						
			14			R62	0.625	15.88	0.88	22.35	0.81	20.57	0.413	10.49							11.00	279.40				
				14		R63	1.000	25.40	1.31	33.27	1.25	31.75	0.681	17.30									16.75	425.45		
16						R64	0.313	7.95	0.56	14.22	0.50	12.70	0.205	5.21	5.75	146.06										
	16	16				R65	0.438	11.13	0.69	17.53	0.63	16.00	0.305	7.75			8.00	203.20	10.00	254.00						
			16			R66	0.625	15.88	0.88	22.35	0.81	20.57	0.413	10.49							11.50	292.10				
				16		R67	1.125	28.58	1.44	36.58	1.38	35.05	0.780	19.81									18.50	469.90		
18						R68	0.313	7.95	0.56	14.22	0.50	12.70	0.206	5.23	6.25	158.75										
	18	18				R69	0.438	11.13	0.69	17.53	0.63	16.00	0.305	7.75			8.25	209.55	10.75	273.05						
			18			R70	0.750	19.05	1.00	25.40	0.94	23.88	0.485	12.32							13.25	336.55				
				18		R71	1.125	28.58	1.44	36.58	1.38	35.05	0.780	19.81									20.75	527.05		
20						R72	0.313	7.95	0.56	14.22	0.50	12.70	0.206	5.23	6.75	171.45										
	20	20				R73	0.500	12.70	0.75	19.05	0.69	17.53	0.341	8.66			8.75	222.25	11.50	192.10						
			20			R74	0.750	19.05	1.00	25.40	0.94	23.88	0.485	12.32							14.25	361.95				
				20		R75	1.250	21.75	1.56	39.62	1.50	38.10	0.879	22.33									22.25	565.15		
24						R76	0.313	7.95	0.56	14.22	0.50	12.70	0.206	5.23	7.25	184.15										
	24	24				R77	0.625	15.88	0.88	22.35	0.81	20.57	0.413	10.49			10.00	254.00	13.25	336.55						
			24			R78	1.000	24.50	1.31	33.27	1.25	31.75	0.681	17.30							18.00	457.20				
				24		R79	1.375	34.93	1.75	44.45	1.63	41.40	0.977	24.82									25.50	647.70		

a) Please to see flange ends for other connection dimension.
b) Flange metal ring gasket of the matching flange ASME B16.20.
c) For the specification of NPS 2~2½" of 900Lb will adopt the dimension of 1500Lb.
d) The length LRTJ of the double-end bolt doesn't include the terminal length.

Nominal wall thickness	Use without backing ring	Ue with continuous rectangular backing ring
≤0.888" (22.5mm)	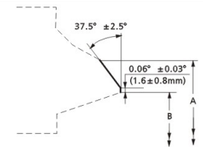	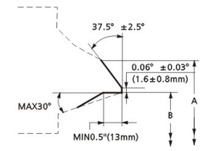
>0.88" (22.5mm)	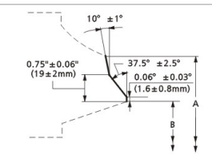	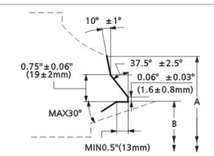

Class 150 and 300 valve which size equal to 12 inch and smaller and 12 inch valves which contract with standard wall pipe(0.375 " thick-ness)are regularly machined. Unless have other requirement.
Orde for class 150 and 300 butt-welding valves which size equal to 14 and larger and class 400 and higher valve for all sizes, it should specified the diameter of the pipe that contract with valves. If need backing ring, indicate specification.
Other types of weld end preparation would be furnished of specified.

ASME B16.25 Butt-welded End

1		2	3		4		5		6		7	
Nominal pipe diameter		Wall thickness of pipe number	Outside diameter of welding end				Nominal inside diameter of pipe		Machined inside diameter of pipe		Nominal wall thickness	
			Steel valve		Forged[1)]							
NPS	DN		A		A1		B		C		t	
in	mm		in	mm	in	mm	in	mm	in	in	mm	mm
2½	65	40	2.96	75	2.88	73.0	2.469	62.5	2.479	62.93	0.203	5.16
		80	2.96	75	2.88	73.0	2.323	59	2.351	59.69	0.276	7.01
		160	2.96	75	2.88	73.0	2.215	54	2.178	55.28	0.375	9.53
3	80	XXS	2.96	75	2.88	73.0	1.771	45	1.868	47.43	0.552	14.02
		40	3.59	91	3.50	88.9	3.068	78	3.081	78.25	0.216	5.49
		80	3.59	91	3.50	88.9	2.900	73.5	2.934	74.53	0.300	7.62
		160	3.59	91	3.50	88.9	2.624	66.5	2.692	68.38	0.438	11.13
3½	90	XXS	3.59	91	3.50	88.9	2.300	58.5	2.409	61.19	0.600	15.24
		40	4.12	105	4.00	101.6	3.548	90	3.564	90.52	0.226	5.74
		80	4.12	105	4.00	101.6	3.364	85.5	3.402	86.42	0.318	8.08
4	100	40	4.62	117	4.50	114.3	4.026	102	4.044	102.73	0.237	6.02
		80	4.62	117	4.50	114.3	3.826	97	3.869	98.28	0.337	8.56
		120	4.62	117	4.50	114.3	3.624	92	3.692	93.78	0.438	11.13
		160	4.62	117	4.50	114.3	3.438	87.5	3.530	89.65	0.531	13.49
5	125	XXS	4.62	117	4.50	114.3	3.152	80	3.279	83.30	0.674	17.12
		40	5.69	144	5.56	141.3	5.047	128	5.070	128.80	0.258	6.55
		80	5.69	144	5.56	141.3	4.813	122	4.866	123.58	0.375	9.53
		120	5.69	144	5.56	141.3	4.563	116	4.647	118.04	0.500	12.70
		160	5.69	144	5.56	141.3	4.313	109.5	4.428	112.47	0.625	15.88
6	150	XXS	5.69	144	5.56	141.3	4.063	103	4.209	106.92	0.750	19.05
		40	6.78	172	6.62	168.3	6.065	154	6.094	154.82	0.280	7.11
		80	6.78	172	6.62	168.3	5.761	146.5	5.828	148.06	0.432	10.97
		120	6.78	172	6.62	168.3	5.501	140	5.600	142.29	0.562	14.27
		160	6.78	172	6.62	168.3	5.187	132	5.326	135.31	0.719	18.26
8	200	XXS	6.78	172	6.62	168.3	4.897	124.5	5.072	128.85	0.864	21.95
		40	8.78	223	8.62	219.1	7.981	203	8.020	203.75	0.322	8.18
		60	8.78	223	8.62	219.1	7.813	198.5	7.873	200.02	0.406	10.31
		80	8.78	223	8.62	219.1	7.625	193.5	7.709	195.84	0.500	12.70
		100	8.78	223	8.62	219.1	7.437	189	7.544	191.65	0.594	15.09
		120	8.78	223	8.62	219.1	7.187	182.5	7.326	186.11	0.719	18.26
		140	8.78	223	8.62	219.1	7.001	178	7.163	181.98	0.812	20.62
		XXS	8.78	223	8.62	219.1	6.875	174.5	7.053	179.16	0.875	22.23
		160	8.78	223	8.62	219.1	6.813	173	6.998	177.79	0.906	23.01
10	250	40	10.94	278	10.75	273.0	10.020	254.5	10.070	255.74	0.365	9.27
		60	10.94	278	10.75	273.0	9.750	247.5	9.834	249.74	0.500	12.70
		80	10.94	278	10.75	273.0	9.562	243	9.670	245.55	0.594	15.09
		100	10.94	278	10.75	273.0	9.312	236.5	9.451	240.01	0.719	18.26
		120	10.94	278	10.75	273.0	9.062	230	9.232	234.44	0.844	21.44
		140	10.94	278	10.75	273.0	8.750	222	8.959	227.51	1.000	25.40
		160	10.94	278	10.75	273.0	8.500	216	8.740	221.95	1.125	28.58

ASME B16.25 Butt-welded End

1		2	3		4		5		6		7	
Nominal pipe diameter		Wall thickness of pipe number	Outside diameter of welding end				Nominal inside diameter of pipe		Machined inside diameter of pipe		Nominal wall thickness	
			Steel valve		Forged[1)]							
NPS	DN		A		A1		B		C		t	
in	mm		in	mm	in	mm	in	mm	in	mm	in	mm
12	300	STD	12.97	329	12.75	323.8	12.000	305	12.053	306.08	0.375	9.53
		40	12.97	329	12.75	323.8	11.938	303	11.999	304.72	0.406	10.31
		XS	12.97	329	12.75	323.8	11.750	298.5	11.834	300.54	0.500	12.70
		60	12.97	329	12.75	323.8	11.626	295	11.725	297.79	0.562	14.27
		80	12.97	329	12.75	323.8	11.374	289	11.505	292.17	0.688	17.48
		100	12.97	329	12.75	323.8	11.062	281	11.232	285.24	0.844	21.44
		120	12.97	329	12.75	323.8	10.750	273	10.959	278.31	1.000	25.40
		140	12.97	329	12.75	323.8	10.500	266.5	10.740	272.75	1.125	28.58
		160	12.97	329	12.75	323.8	10.126	257	10.413	264.45	1.312	33.32
14	350	STD	14.25	362	14.00	355.6	13.250	336.5	13.303	337.88	0.375	9.53
		40	14.25	362	14.00	355.6	13.124	333.5	13.192	335.08	0.438	11.13
		XS	14.25	362	14.00	355.6	13.000	330	13.084	332.34	0.500	12.70
		60	14.25	362	14.00	355.6	12.812	325.5	12.920	328.15	0.594	15.09
		80	14.25	362	14.00	355.6	12.500	317.5	12.646	321.22	0.750	19.05
		100	14.25	362	14.00	355.6	12.124	308	12.318	312.86	0.938	23.83
		120	14.25	362	14.00	355.6	11.812	300	12.044	305.93	1.094	27.79
		140	14.25	362	14.00	355.6	11.500	292	11.771	299.00	1.250	31.75
		160	14.25	362	14.00	355.6	11.188	284	11.498	292.07	1.406	35.71
16	400	STD	16.25	413	16.00	406.4	15.250	387.5	15.303	388.68	0.375	9.53
		40	16.25	413	16.00	406.4	15.000	381	15.084	383.14	0.500	12.70
		60	16.25	413	16.00	406.4	14.688	373	14.811	376.21	0.656	16.66
		80	16.25	413	16.00	406.4	14.312	363.5	14.482	367.84	0.844	21.44
		100	16.25	413	16.00	406.4	19.938	354	14.155	359.53	1.031	26.19
		120	16.25	413	16.00	406.4	13.562	344.5	13.826	351.18	1.219	30.96
		140	16.25	413	16.00	406.4	13.124	333.5	13.442	341.43	1.438	36.53
		160	16.25	413	16.00	406.4	12.812	325.5	13.170	334.50	1.594	40.49
18	450	STD	18.28	464	18.00	457.2	17.250	438	17.303	439.48	0.375	9.53
		XS	18.28	464	18.00	457.2	17.000	432	17.084	433.94	0.500	12.70
		40	18.28	464	18.00	457.2	16.876	428.5	16.975	431.19	0.562	14.27
		60	18.28	464	18.00	457.2	16.500	419	15.646	422.82	0.750	19.05
		80	18.28	464	18.00	457.2	16.124	409.5	16.318	414.46	0.938	23.83
		100	18.28	464	18.00	457.2	15.688	398.5	15.936	404.78	1.156	29.36
		120	18.28	464	18.00	457.2	15.250	387.5	15.553	395.03	1.375	34.93
		140	18.28	464	18.00	457.2	14.876	378	15.225	386.77	1.562	39.67
		160	18.28	464	18.00	457.2	14.438	366.5	14.842	376.99	1.781	45.24
20	500	STD	20.31	516	20.00	508.0	19.250	489	19.303	490.28	0.375	9.53
		XS	20.31	516	20.00	508.0	19.000	482.5	19.084	484.74	0.500	12.70
		40	20.31	516	20.00	508.0	18.812	478	18.920	480.55	0.594	15.09
		60	20.31	516	20.00	508.0	18.376	467	18.538	470.88	0.812	20.62
		80	20.31	516	20.00	508.0	17.938	455.5	18.155	461.13	1.031	26.19
		100	20.31	516	20.00	508.0	17.438	443	17.717	450.02	1.281	32.54
		120	20.31	516	20.00	508.0	17.000	432	17.334	440.29	1.500	38.10
		140	20.31	516	20.00	508.0	16.500	419	16.896	429.17	1.750	44.45
		160	20.31	516	20.00	508.0	16.062	408	16.513	419.44	1.969	50.01
22	550	STD	22.34	567	22.00	558.8	21.250	520	21.303	541.08	0.375	9.53
		XS	22.34	567	22.00	558.8	21.000	533	21.084	535.54	0.500	12.70
		60	22.34	567	22.00	558.8	20.250	514	20.428	518.86	0.875	22.23
		80	22.34	567	22.00	558.8	19.750	502	19.990	507.75	1.125	28.58
		100	22.34	567	22.00	558.8	19.250	488.5	19.553	496.63	1.375	34.93
		120	22.34	567	22.00	558.8	18.750	476	19.115	485.52	1.625	41.28
		140	22.34	567	22.00	558.8	18.250	464	18.678	474.41	1.875	47.63
		160	22.34	567	22.00	558.8	17.750	450.5	18.240	463.30	2.215	53.98

Note: 1) Forged machined component part
a) STD=Standard wall thickness
b) XS=Intensifying wall thickness
c) XXS=Double intensifying wall thickness.

Nominal wall thickness	Use without backing ring	Ue with continuous rectangular backing ring
≤0.888" (22.5mm)	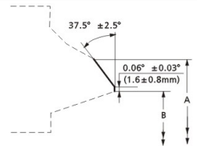	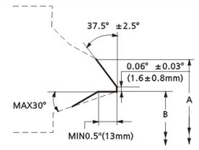
>0.88" (22.5mm)	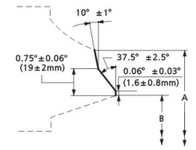	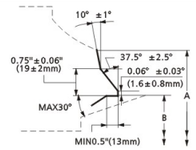

Class 150 and 300 valve which size equal to 12 inch and smaller and 12 inch valves which contract with standard wall pipe(0.375 " thick-ness)are regularly machined. Unless have other requirement.
Orde for class 150 and 300 butt-welding valves which size equal to 14 and larger and class 400 and higher valve for all sizes, it should specified the diameter of the pipe that contract with valves. If need backing ring, indicate specification.
Other types of weld end preparation would be furnished of specified.

ASME B16.25 Butt-welded End

1		2	3		4		5		6		7	
Nominal pipe diameter		Wall thickness of pipe number	Outside diameter of welding end				Nominal inside diameter of pipe		Machined inside diameter of pipe		Nominal wall thickness	
			Steel valve		Forged[1)]							
NPS	DN		A		A1		B		C		t	
in	mm		in	mm	in	mm	in	mm	in	mm	in	mm
24	600	STD	24.38	619	24.00	609.6	23.250	590.5	23.303	591.88	0.375	9.53
		XS	24.38	619	24.00	609.6	23.000	584	23.084	586.34	0.500	12.70
		30	24.38	619	24.00	609.6	22.876	581	22.975	583.59	0.562	14.27
		40	24.38	619	24.00	609.6	22.624	574.5	22.755	577.97	0.688	17.48
		60	24.38	619	24.00	609.6	22.062	560.5	22.263	565.49	0.969	24.61
		80	24.38	619	24.00	609.6	21.562	547.5	21.826	554.38	1.219	30.93
		100	24.38	619	24.00	609.6	20.938	532	21.280	540.49	1.531	38.89
		120	24.38	619	24.00	609.6	20.376	517.5	20.788	528.03	1.812	46.02
		140	24.38	619	24.00	609.6	19.876	505	20.350	516.91	2.062	52.37
		160	24.38	619	24.00	609.6	19.312	490.5	19.857	504.37	2.344	59.54
26	650	10	26.38	670	26.00	660.4	25.376	645.5	25.413	645.50	0.312	7.92
		20	26.38	670	26.00	660.4	25.000	635	25.084	637.14	0.500	12.70
28	700	10	28.38	721	28.00	711.2	27.376	695.5	27.413	696.30	0.312	7.92
		20	28.38	721	28.00	711.2	27.000	686	27.084	687.94	0.500	12.70
		30	28.38	721	28.00	711.2	26.750	679.5	26.865	862.37	0.625	15.88
30	750	10	30.38	772	30.0	762.0	29.376	746	29.413	747.10	0.312	7.92
		20	30.38	772	30.0	762.0	29.000	736.5	29.084	738.74	0.500	12.70
		30	30.38	772	30.0	762.0	28.750	730	28.865	733.17	0.625	15.88
32	800	10	32.50	825	32.0	812.8	31.376	797	31.413	797.90	0.312	7.92
		20	32.50	825	32.0	812.8	31.000	787.5	31.084	789.54	0.500	12.70
		30	32.50	825	32.0	812.8	30.750	781	30.865	783.97	0.625	15.88
		40	32.50	825	32.0	812.8	30.624	778	30.755	781.17	0.688	17.48
34	850	10	34.50	876	34.0	863.6	33.376	848	33.413	848.70	0.312	7.92
		20	34.50	876	34.0	863.6	33.000	838	33.084	840.34	0.500	12.70
		30	34.50	876	34.0	863.6	32.750	832	32.865	834.77	0.625	15.88
		40	34.50	876	34.0	863.6	32.624	828.5	32.755	831.97	0.688	17.48
36	900	10	36.50	927	36.0	914.4	35.376	898.5	35.413	899.50	0.312	7.92
		20	36.50	927	36.0	914.4	35.000	889	35.084	891.14	0.500	12.70
		30	36.50	927	36.0	914.4	34.750	882.5	34.865	885.57	0.625	15.88
		40	36.50	927	36.0	914.4	34.500	876.5	34.646	880.02	0.750	19.05

Note: 1) Forged machined component part
a) STD=Standard wall thickness
b) XS=Intensifying wall thickness
c) XXS=Double intensifying wall thickness.